YIKA
TRANSMISSION MACHINE
宜嘉·全球动力专家

# VR 精密行星减速机
# PLANETARY GEAR MOTOR

www.cnyika.com

# VR系列减速机机种、机型标识说明
# TYPE AND MODEL NUMBER

## 剖视图 SECTIONAL DRAWING

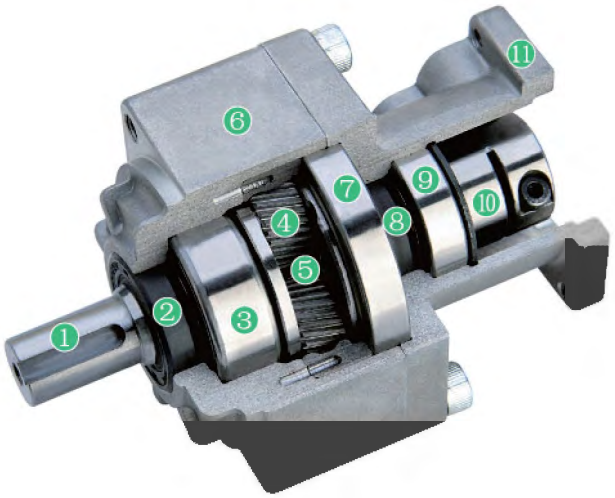


① 输出轴 Output shaft
② 油封 Seal for the output shaft
③ 输出轴前轴承 Bearing for the output shaft
④ 行星轮 Planetary gear
⑤ 太阳轮 Sunwheel
⑥ 前盖 Front cover
⑦ 输出轴后轴承 Bearing for the output shaft
⑧ 油封 Seal for the input shaft
⑨ 输入轴轴承 Bearing for the input shaft
⑩ 精密装夹系统 Precision clamping system
⑪ 后盖 rear cover

### ■ 机种、机型标识说明 Type and model number

| VR减速机 VR Reducers | | | | | | 伺服电机Servo Motor | | |
|---|---|---|---|---|---|---|---|---|
| VR | S | F - | □ | - 20 | D - | 750 - | □ | - □ |
| ① | ② | ③ | ④ | ⑤ | ⑥ | ⑦ | ⑧ | ⑨ |

① VR系列减速机的称呼 VR Reducer Model

② 输入部型式:
S: 夹具紧固方式（不论马达轴有键槽还是无键槽(请参照P.46)均可使用<D形轴不适用>）※1
也可采用以下安装方式:
K: 偶合 (直轴、带键槽)※2 。
A: 适配器方式(欲知详情请与本公司联系)。
※1 只有K型可与D形轴连接。
※2 采用特别订购方式。欲知详情请与本公司联系。

Input part type:
S: clamp fastening mode (Use ful whatever motor shaft with keyway or without keyway (See 46 page.) / (<D cut unavailable>)※1
Can adopt followiing assembly way:
K : Coupling(straight shaft, key slot )※2
A : Adaptor mode(For details, contact us.)
※1 D cut is only compatible with K type.
※2 Response only to a special order. For more details, contact us.

③ 安装方式和输出轴方向 F：法兰型(安装方向自由) D：带D法兰型(安装方向自由)
Assembly mode and output shaft direction / F: flange type, free assembly direction D: D flange type, free assembly direction

④ 减速机规格: 无标记: 标准 PB: 高精度型 LB: 精密型
Reducer spec. / no symbol: Standard PB: High precision type LB: Low-backlash type

■精度Amount of backlash

| 减速机段位号 Reducertype no. | VR-□(标准型) Standard type | VR-LB(精密型) Low-backlash type | VR-PB(高精密型) High precision type |
|---|---|---|---|
| B段Type | 0.25°(15分arc-min) | 0.166°(10分arc-min) | 0.05°(3分arc-min) |
| C段Type | 0.25°(15分arc-min) | 0.08°(5分arc-min) | 0.05°(3分arc-min) |
| D段Type | 0.25°(15分arc-min) | 0.08°(5分arc-min) | 0.05°(3分arc-min) |
| E段Type | 0.25°(15分arc-min) | 0.08°(5分arc-min) | 0.05°(3分arc-min) |

※输出轴负荷量为容许输出扭矩的±5%时的值。

⑤ 减速比: 单级型: 3, 4, 5, 6, 7, 8, 9, 10 两级型: 15, 20, 25, 35, 45, 81
Reduction ratio / 1 stage types 3, 4, 5, 6, 7, 8, 9, 10 2 stage types 15, 20, 25, 35, 45, 81

⑥ 减速机段位号 Reducer type no.

⑦ 适用伺服马达功率(W) Applicable servo motor power(W)

⑧ 生产厂家名称 Manufacturer name

⑨ 型号(请务必告知我们马达的生产厂家和产品型号)
Type (Inform us manufacturer name and motor type.)

# 减速比、段位号
# REDUCTION RATIO & TYPE NUMBER

## ■ 输入转速为3000rpm时 When input speed is 3000rpm

B段type　C段type　D段type　E段type

| 减速比Reduction ratio / 容量Motor power(W) | 单级减速 1 step reduction | | | 两级减速 2 step reduction | | | | | |
|---|---|---|---|---|---|---|---|---|---|
| | 1/3 | 1/5 | 1/9 | 1/15 | 1/20 | 1/25 | 1/35 | 1/45 | 1/81 |
| 50W | | | | | | | | | |
| 100W | | | | | | | | | |
| 200W | | | | | | | | | |
| 400W | | | | | | | | | |
| 750W | | | | | | | | | |
| 1000W | | | | | | | | | |
| 1500W | | | | | | | | | |
| 2000W | | | | | | | | | |
| 2500W | | | | | | | | | |
| 3000W | | | | | | | | | |
| 3500W | | | | | | | | | |
| 4000W | | | | | | | | | |
| 4500W | | | | | | | | | |
| 5000W | | | | | | | | | |

注1）全部为斜齿轮适用范围　Note 1) All corresponding to helical gear

## ■输入转速为2000rpm时When input speed is 2000rpm

B段type　C段type　D段type　E段type

| 减速比Reduction ratio / 容量Motor power(W) | 单级减速 1 step reduction | | | 两级减速 2 step reduction | | | | | |
|---|---|---|---|---|---|---|---|---|---|
| | 1/3 | 1/5 | 1/9 | 1/15 | 1/20 | 1/25 | 1/35 | 1/45 | 1/81 |
| 50W | | | | | | | | | |
| 100W | | | | | | | | | |
| 200W | | | | | | | | | |
| 400W | | | | | | | | | |
| 750W | | | | | | | | | |
| 1000W | | | | | | | | | |
| 1500W | | | | | | | | | |
| 2000W | | | | | | | | | |
| 2500W | | | | | | | | | |
| 3000W | | | | | | | | | |
| 3500W | | | | | | | | | |

注1）全部为斜齿轮适用范围
Note 1) All corresponding to helical gear

※以下为限扭矩机种
B段：1/5减速(100W)
C段：1/81减速(50W)
D段：1/3减速(1500W)、1/45减速(200W)、1/81减速(100W)
E段：1/3减速(3500W)、1/25减速(750W)

※Torque is limited to the following types:
B type : 1/5 reduction (100W)
C type : 1/81 reduction (50W)
D type : 1/3 reduction (1500W), 1/45 reduction (200W), 1/81 reduction (100W)
E type : 1/3 reduction (3500W), 1/25 reduction (250W)

## ■ 关于润滑油About lubricant

●润滑：润滑脂　●更换：不可

● Lubrication: grease　● Replacement: Not available

## ■ 带D法兰型的尺寸图 Dimensional drawing of D flange type

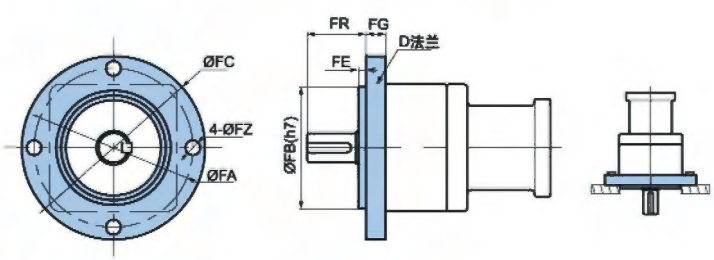


单位Unit: mm

| 段号Type no. | FG | FR | FE | FB | FC | FA | FZ |
|---|---|---|---|---|---|---|---|
| B | 8 | 24 | 3 | 50 | 75 | 65 | 6 |
| C | 12 | 33.5 | 3 | 72 | 110 | 95 | 7 |
| D | 13 | 48 | 5 | 90 | 134 | 115 | 8.8 |

※向上图那样的安装，请指定带D法兰(另卖)。另外，D法兰也可另外安装。
※In case of assembly as mentioned in the above figure, designate D flange(separate selling). Also, the D flange may be assembly separately.

## ■ 输出轴端面丝锥孔加工(可选)Processing of output shaft tab (option)

B段：M5X10　C段：M6X12（或M8X16）　D段：M8X16（或M6X12）　E段：M10X20
B type : M5X10　C type: M6X12(or M8X16)　D type: M8X16(or M6X12)　E type: M10X20

# 性能表（输入转速为3,000rpm时）
# PERFORMANCE TABLE (WHEN INPUT SPEED IS 3000RPM)

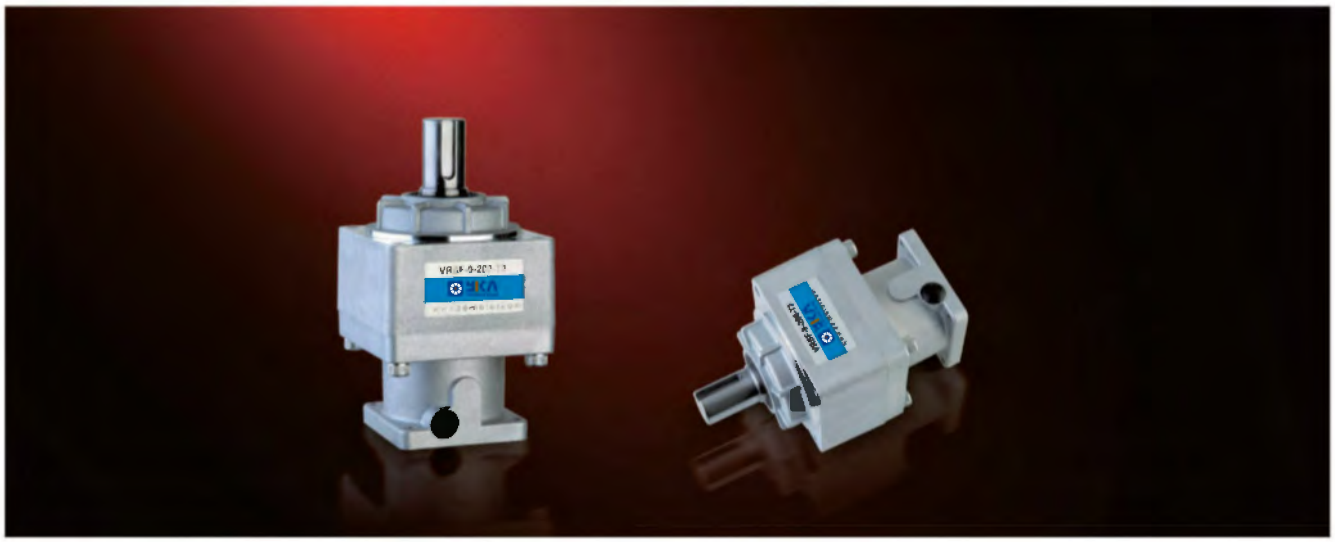

## ■性能表 Performance Table

| 减速比 Reduction ratio | 型号 Type | | | | 输出轴转速 Output shaft speed | 额定输出扭矩 Standard output torque | 瞬间最大输出扭矩 Instantaneous max. output torque | 容许径向负荷 Permissible radial load | 容许轴向负荷 Permissible axial load | 输入轴换算内部惯性力矩 Internal moment of inertia of input shaftconversion | 容许输出扭矩 Permissible output torque | 瞬间最大容许输出扭矩 Instantaneous max. permissible output torque |
|---|---|---|---|---|---|---|---|---|---|---|---|---|
| | 机种 Model | 减速比 Reduction ratio | 段位号 Type no. | 马达功率 Motor | (rpm) | (N·m) | (N·m) | (N) | (N) | ($10^{-4}$×kg·m²) | (N·m) | (N·m) |
| 1/3 | VR□F | -3 | B | -50 | 1000 | 0.255 | 0.784 | 392 | 196 | 0.0575 | 3.43 | 10.3 |
| | VR□F | -3 | B | -100 | 1000 | 0.715 | 2.06 | 392 | 196 | 0.0575 | 3.43 | 10.3 |
| | VR□F | -3 | B | -200 | 1000 | 1.47 | 4.51 | 392 | 196 | 0.135 | 3.43 | 10.3 |
| | VR□F | -3 | B | -400 | 1000 | 3.43 | 10.3 | 392 | 196 | 0.145 | 3.43 | 10.3 |
| | VR□F | -3 | C | -750 | 1000 | 6.37 | 19.3 | 784 | 392 | 0.913 | 6.86 | 20.6 |
| | VR□F | -3 | D | -1000 | 1000 | 7.55 | 22.8 | 882 | 441 | 2.43 | 18.3 | 54.9 |
| | VR□F | -3 | D | -1500 | 1000 | 12.3 | 37.1 | 882 | 441 | 2.43 | 18.3 | 54.9 |
| | VR□F | -3 | D | -2000 | 1000 | 17.2 | 51.5 | 882 | 441 | 2.43 | 18.3 | 54.9 |
| | VR□F | -3 | E | -2500 | 1000 | 19.0 | 57.2 | 1370 | 686 | 5.55 | 44.1 | 132 |
| | VR□F | -3 | E | -3000 | 1000 | 23.7 | 71.2 | 1370 | 686 | 5.50 | 44.1 | 132 |
| | VR□F | -3 | E | -3500 | 1000 | 28.3 | 85.2 | 1370 | 686 | 5.50 | 44.1 | 132 |
| | VR□F | -3 | E | -4000 | 1000 | 33.1 | 99.0 | 1370 | 686 | 5.78 | 44.1 | 132 |
| | VR□F | -3 | E | -4500 | 1000 | 37.7 | 113 | 1370 | 686 | 5.78 | 44.1 | 132 |
| | VR□F | -3 | E | -5000 | 1000 | 42.9 | 128 | 1370 | 686 | 5.78 | 44.1 | 132 |
| 1/5 | VR□F | -5 | B | -50 | 600 | 0.510 | 1.47 | 490 | 245 | 0.0400 | 1.57 | 4.70 |
| | VR□F | -5 | B | -100 | 600 | 1.18 | 3.72 | 490 | 245 | 0.0400 | 1.57 | 4.70 |
| | VR□F | -5 | B | -200 | 600 | 2.65 | 8.04 | 490 | 245 | 0.118 | 2.84 | 8.53 |
| | VR□F | -5 | C | -400 | 600 | 5.39 | 16.2 | 980 | 490 | 0.363 | 6.57 | 19.7 |
| | VR□F | -5 | C | -750 | 600 | 10.7 | 32.1 | 980 | 490 | 0.713 | 11.5 | 34.3 |
| | VR□F | -5 | D | -1000 | 600 | 13.4 | 40.5 | 1080 | 539 | 1.85 | 23.5 | 70.6 |
| | VR□F | -5 | D | -1500 | 600 | 21.5 | 64.4 | 1080 | 539 | 1.85 | 23.5 | 70.6 |
| | VR□F | -5 | E | -2000 | 600 | 23.8 | 71.5 | 1670 | 833 | 3.50 | 56.8 | 171 |
| | VR□F | -5 | E | -2500 | 600 | 31.8 | 95.5 | 1670 | 833 | 3.50 | 56.8 | 171 |
| | VR□F | -5 | E | -3000 | 600 | 39.6 | 119 | 1670 | 833 | 3.48 | 56.8 | 171 |
| | VR□F | -5 | E | -3500 | 600 | 47.2 | 141 | 1670 | 833 | 3.48 | 56.8 | 171 |
| | VR□F | -5 | E | -4000 | 600 | 55.3 | 166 | 1670 | 833 | 3.75 | 56.8 | 171 |
| 1/9 | VR□F | -9 | B | -50 | 333 | 0.921 | 2.74 | 588 | 294 | 0.0350 | 2.35 | 7.25 |
| | VR□F | -9 | B | -100 | 333 | 2.25 | 6.86 | 588 | 294 | 0.0350 | 2.35 | 7.25 |
| | VR□F | -9 | C | -200 | 333 | 3.72 | 11.3 | 1180 | 588 | 0.275 | 9.70 | 29.2 |
| | VR□F | -9 | C | -400 | 333 | 9.51 | 28.5 | 1180 | 588 | 0.275 | 9.70 | 29.2 |
| | VR□F | -9 | D | -750 | 333 | 18.2 | 54.7 | 1470 | 735 | 0.650 | 18.2 | 54.7 |
| | VR□F | -9 | E | -1000 | 333 | 20.0 | 60.1 | 1960 | 980 | 2.81 | 73.5 | 221 |
| | VR□F | -9 | E | -1500 | 333 | 34.3 | 103 | 1960 | 980 | 2.81 | 73.5 | 221 |
| | VR□F | -9 | E | -2000 | 333 | 48.6 | 146 | 1960 | 980 | 2.81 | 73.5 | 221 |
| | VR□F | -9 | E | -2500 | 333 | 60.8 | 182 | 1960 | 980 | 2.81 | 73.5 | 221 |
| | VR□F | -9 | E | -3000 | 333 | 73.0 | 219 | 1960 | 980 | 2.77 | 73.5 | 221 |

注1) 输入轴换算惯性力矩仅为减速机的数值，不包括马达的惯性力矩。
注2) 最高输入转速为5000rpm.正常情况下请将转速控制在3000rpm以下。
注3) 容许径向负荷为输出轴中央部的数值。
注4) 全部为斜齿轮适用范围。

Note 1) The moment of inertia of input shaft conversion is only gained from the reducer, so it does not include moment of inertia of the motor.
Note 2) The max. input speed is 5000rpm. Usually set to 3000rpm or less.
Note 3) The permissible radial load is indicated on the center of the output shaft.
Note 4) All values are within the range corresponding to helical gear.

# 性能表（输入转速为3,000rpm时）
# PERFORMANCE TABLE (WHEN INPUT SPEED IS 3000RPM)

## ■性能表 Performance Table

| 减速比 Reduction ratio | 型号 Type | | | | 输出轴转速 Output shaft speed | 额定输出扭矩 Standard output torque | 瞬间最大输出扭矩 Instantaneous max. output torque | 容许径向负荷 Permissible radial load | 容许轴向负荷 Permissible axial load | 输入轴换算内部惯性力矩 Internal moment ofinertia of input shaftconversion | 容许输出扭矩 Permissible output torque | 瞬间最大容许输出扭矩 Instantaneous max. permissible output torque |
|---|---|---|---|---|---|---|---|---|---|---|---|---|
| | 机种 Model | 减速比 Reduction ratio | 段位号 Type no. | 马达功率 Motor | (rpm) | (N·m) | (N·m) | (N) | (N) | ($10^{-4}$×kg·m²) | (N·m) | (N·m) |
| 1/15 | VR□F | -15 | B | -50 | 200 | 1.67 | 5.00 | 784 | 392 | 0.0350 | 4.02 | 12.2 |
| | VR□F | -15 | B | -100 | 200 | 3.72 | 11.4 | 784 | 392 | 0.0350 | 4.02 | 12.2 |
| | VR□F | -15 | C | -200 | 200 | 6.27 | 18.8 | 1470 | 735 | 0.300 | 16.2 | 48.6 |
| | VR□F | -15 | C | -400 | 200 | 15.8 | 47.5 | 1470 | 735 | 0.300 | 16.2 | 48.6 |
| | VR□F | -15 | D | -750 | 200 | 30.4 | 91.2 | 1760 | 882 | 0.700 | 30.4 | 91.2 |
| | VR□F | -15 | E | -1000 | 200 | 33.3 | 100 | 2350 | 1180 | 1.95 | 91.4 | 274 |
| | VR□F | -15 | E | -1500 | 200 | 57.2 | 172 | 2350 | 1180 | 2.80 | 91.4 | 274 |
| | VR□F | -15 | E | -2000 | 200 | 81.0 | 243 | 2350 | 1180 | 2.80 | 91.4 | 274 |
| 1/20 | VR□F | -20 | B | -50 | 150 | 2.21 | 6.63 | 804 | 402 | 0.0340 | 5.00 | 15.0 |
| | VR□F | -20 | B | -100 | 150 | 5.00 | 15.0 | 804 | 402 | 0.0340 | 5.00 | 15.0 |
| | VR□F | -20 | C | -200 | 150 | 8.69 | 26.1 | 1570 | 785 | 0.294 | 21.1 | 63.3 |
| | VR□F | -20 | C | -400 | 150 | 21.1 | 63.3 | 1570 | 785 | 0.294 | 21.1 | 63.3 |
| | VR□F | -20 | D | -750 | 150 | 40.6 | 122 | 1910 | 955 | 0.690 | 40.6 | 122 |
| 1/25 | VR□F | -25 | B | -50 | 120 | 2.74 | 8.33 | 882 | 441 | 0.0325 | 4.02 | 12.2 |
| | VR□F | -25 | B | -100 | 120 | 6.27 | 19.0 | 882 | 441 | 0.0325 | 6.27 | 19.0 |
| | VR□F | -25 | C | -200 | 120 | 11.1 | 33.3 | 1670 | 833 | 0.288 | 21.7 | 64.9 |
| | VR□F | -25 | C | -400 | 120 | 26.4 | 79.2 | 1670 | 833 | 0.288 | 26.4 | 79.2 |
| | VR□F | -25 | D | -750 | 120 | 50.7 | 152 | 2060 | 1030 | 0.680 | 50.7 | 152 |
| | VR□F | -25 | E | -1000 | 120 | 55.7 | 167 | 2650 | 1320 | 1.88 | 65.4 | 196 |
| 1/35 | VR□F | -35 | B | -50 | 85 | 3.84 | 11.5 | 882 | 441 | 0.0300 | 3.84 | 11.5 |
| | VR□F | -35 | C | -100 | 85 | 7.24 | 21.7 | 1670 | 833 | 0.0650 | 13.9 | 41.7 |
| | VR□F | -35 | C | -200 | 85 | 15.5 | 46.6 | 1670 | 833 | 0.262 | 15.5 | 46.6 |
| | VR□F | -35 | D | -400 | 85 | 37.0 | 111 | 2060 | 1030 | 0.269 | 37.0 | 111 |
| | VR□F | -35 | E | -750 | 85 | 71.0 | 213 | 3430 | 1715 | 0.473 | 71.0 | 213 |
| 1/45 | VR□F | -45 | C | -50 | 66 | 3.86 | 11.6 | 1670 | 833 | 0.0285 | 9.50 | 28.6 |
| | VR□F | -45 | C | -100 | 66 | 9.31 | 28.0 | 1670 | 833 | 0.0285 | 9.50 | 28.6 |
| | VR□F | -45 | D | -200 | 66 | 21.1 | 63.5 | 2060 | 1030 | 0.0256 | 28.3 | 85.2 |
| | VR□F | -45 | E | -400 | 66 | 47.5 | 142.5 | 3520 | 1760 | 0.245 | 57.0 | 171 |
| | VR□F | -45 | E | -750 | 66 | 91.3 | 274 | 3520 | 1760 | 1.77 | 91.3 | 274 |
| 1/81 | VR□F | -81 | C | -50 | 37 | 7.02 | 20.8 | 1670 | 833 | 0.0270 | 9.70 | 29.2 |
| | VR□F | -81 | D | -100 | 37 | 14.0 | 42.0 | 2060 | 1030 | 0.0300 | 17.8 | 53.5 |
| | VR□F | -81 | E | -200 | 37 | 36.1 | 108.3 | 3530 | 1765 | 0.240 | 43.3 | 129.9 |

注1) 输入轴换算惯性力矩仅为减速机的数值，不包括马达的惯性力矩。
注2) 最高输入转速为5000rpm.正常情况下请将转速控制在3000rpm以下。
注3) 容许径向负荷为输出轴中央部的数值。
注4) 全部为斜齿轮适用范围。

Note 1) The moment of inertia of input shaft conversion is only gained from the reducer, so it does not include moment of inertia of the motor.
Note 2) The max. input speed is 5000rpm. Usually set to 3000rpm or less.
Note 3) The permissible radial load is indicated on the center of the output shaft.
Note 4) All values are within the range corresponding to helical gear.

# 性能表（输入转速为2,000rpm时）
# PERFORMANCE TABLE(WHEN INPUT SPEED IS 2000RPM)

标准型、LB(精度型)、PB(高精度型)均为相同的规格The same specification applies to all of standard type, LB(low backlash), and PB(high precision type).

## ■性能表 Performance Table

| 减速比 Reduction ratio | 型号 Type | | | | 输出轴转速 Output shaft speed | 额定输出扭矩 Standard output torque | 瞬间最大输出扭矩 Instantaneous max. output torque | 容许径向负荷 Permissible radial load | 容许轴向负荷 Permissible axial load | 输入轴换算内部惯性力矩 Internal moment of inertia of input shaft conversion | 容许输出扭矩 Permissible output torque | 瞬间最大容许输出扭矩 Instantaneous max. permissible output torque |
|---|---|---|---|---|---|---|---|---|---|---|---|---|
| | 机种 Model | 减速比 Reduction ratio | 段位号 Type no. | 马达功率 Motor | (rpm) | (N·m) | (N·m) | (N) | (N) | ($10^{-4}$×kg·m$^2$) | (N·m) | (N·m) |
| 1/3 | VR□F | -3 | B | -50 | 666 | 0.477 | 1.43 | 450 | 225 | 0.0575 | 3.43 | 10.3 |
| | VR□F | -3 | B | -100 | 666 | 1.05 | 3.15 | 450 | 225 | 0.135 | 3.43 | 10.3 |
| | VR□F | -3 | B | -200 | 666 | 2.48 | 7.45 | 450 | 225 | 0.145 | 3.43 | 10.3 |
| | VR□F | -3 | C | -400 | 666 | 5.01 | 15.0 | 900 | 450 | 0.913 | 6.86 | 20.6 |
| | VR□F | -3 | D | -750 | 666 | 8.73 | 26.2 | 1010 | 505 | 2.43 | 18.3 | 54.9 |
| | VR□F | -3 | D | -1000 | 666 | 12.3 | 37.1 | 1010 | 505 | 2.43 | 18.3 | 54.9 |
| | VR□F | -3 | D | -1500 | 666 | 18.3 | 54.9 | 1010 | 505 | 2.43 | 18.3 | 54.9 |
| | VR□F | -3 | E | -2000 | 666 | 23.7 | 71.2 | 1570 | 785 | 5.50 | 44.1 | 132 |
| | VR□F | -3 | E | -2500 | 666 | 30.8 | 92.5 | 1570 | 785 | 5.50 | 44.1 | 132 |
| | VR□F | -3 | E | -3000 | 666 | 37.7 | 113 | 1570 | 785 | 5.50 | 44.1 | 132 |
| | VR□F | -3 | E | -3500 | 666 | 44.1 | 132 | 1570 | 785 | 5.78 | 44.1 | 132 |
| 1/5 | VR□F | -5 | B | -50 | 400 | 0.795 | 2.39 | 560 | 280 | 0.0400 | 1.57 | 4.70 |
| | VR□F | -5 | B | -100 | 400 | 1.57 | 4.70 | 560 | 280 | 0.118 | 1.57 | 4.70 |
| | VR□F | -5 | C | -200 | 400 | 3.82 | 11.5 | 1120 | 560 | 0.363 | 6.57 | 19.7 |
| | VR□F | -5 | C | -400 | 400 | 8.35 | 25.1 | 1120 | 560 | 0.713 | 11.5 | 34.3 |
| | VR□F | -5 | D | -750 | 400 | 15.5 | 46.5 | 1230 | 615 | 1.85 | 23.5 | 70.6 |
| | VR□F | -5 | D | -1000 | 400 | 21.5 | 64.4 | 1230 | 615 | 1.85 | 23.5 | 70.6 |
| | VR□F | -5 | E | -1500 | 400 | 27.8 | 83.5 | 1900 | 950 | 3.50 | 56.8 | 171 |
| | VR□F | -5 | E | -2000 | 400 | 39.6 | 119 | 1900 | 950 | 3.48 | 56.8 | 171 |
| | VR□F | -5 | E | -2500 | 400 | 51.4 | 154 | 1900 | 950 | 3.75 | 56.8 | 171 |
| 1/9 | VR□F | -9 | B | -50 | 222 | 1.57 | 4.72 | 670 | 335 | 0.0350 | 2.35 | 7.25 |
| | VR□F | -9 | C | -100 | 222 | 2.35 | 7.04 | 1340 | 670 | 0.275 | 9.70 | 29.2 |
| | VR□F | -9 | C | -200 | 222 | 6.64 | 19.9 | 1340 | 670 | 0.275 | 9.70 | 29.2 |
| | VR□F | -9 | D | -400 | 222 | 14.0 | 41.9 | 1680 | 840 | 0.650 | 18.2 | 54.7 |
| | VR□F | -9 | E | -750 | 222 | 23.6 | 70.9 | 2240 | 1120 | 2.81 | 73.5 | 221 |
| | VR□F | -9 | E | -1000 | 222 | 34.3 | 103 | 2240 | 1120 | 2.81 | 73.5 | 221 |
| | VR□F | -9 | E | -1500 | 222 | 53.7 | 161 | 2240 | 1120 | 2.81 | 73.5 | 221 |
| | VR□F | -9 | E | -2000 | 222 | 73.0 | 219 | 2240 | 1120 | 2.77 | 73.5 | 221 |
| 1/15 | VR□F | -15 | B | -50 | 133 | 2.62 | 7.87 | 882 | 441 | 0.0350 | 4.02 | 12.2 |
| | VR□F | -15 | C | -100 | 133 | 3.91 | 11.7 | 1670 | 833 | 0.300 | 16.2 | 48.6 |
| | VR□F | -15 | C | -200 | 133 | 11.1 | 33.2 | 1670 | 833 | 0.300 | 16.2 | 48.6 |
| | VR□F | -15 | D | -400 | 133 | 23.3 | 69.8 | 2020 | 1010 | 0.700 | 30.4 | 91.2 |
| | VR□F | -15 | E | -750 | 133 | 39.4 | 118 | 2650 | 1320 | 2.80 | 91.4 | 274 |
| | VR□F | -15 | E | -1000 | 133 | 57.2 | 172 | 2650 | 1320 | 2.80 | 91.4 | 274 |
| | VR□F | -15 | E | -1500 | 133 | 91.3 | 274 | 2650 | 1320 | 2.80 | 91.4 | 274 |
| 1/20 | VR□F | -20 | B | -50 | 100 | 3.50 | 10.5 | 910 | 455 | 0.0340 | 5.00 | 15.0 |
| | VR□F | -20 | C | -100 | 100 | 5.73 | 17.2 | 1790 | 895 | 0.294 | 21.1 | 63.3 |
| | VR□F | -20 | C | -200 | 100 | 14.8 | 44.4 | 1790 | 895 | 0.294 | 21.1 | 63.3 |
| | VR□F | -20 | D | -400 | 100 | 31.0 | 93.1 | 2180 | 1090 | 0.690 | 40.6 | 122 |
| 1/25 | VR□F | -25 | B | -50 | 80.0 | 4.37 | 13.1 | 882 | 441 | 0.0325 | 6.27 | 19.0 |
| | VR□F | -25 | C | -100 | 80.0 | 7.16 | 21.5 | 1670 | 833 | 0.288 | 21.7 | 64.9 |
| | VR□F | -25 | C | -200 | 80.0 | 18.5 | 55.4 | 1670 | 833 | 0.288 | 21.7 | 64.9 |
| | VR□F | -25 | D | -400 | 80.0 | 38.8 | 116 | 2060 | 1030 | 0.680 | 50.7 | 152 |
| | VR□F | -25 | E | -750 | 80.0 | 65.4 | 196 | 2650 | 1320 | 1.88 | 65.4 | 196 |
| 1/35 | VR□F | -35 | C | -50 | 57 | 4.43 | 13.3 | 1900 | 950 | 0.262 | 15.5 | 46.6 |
| | VR□F | -35 | C | -100 | 57 | 12.7 | 38.1 | 1900 | 950 | 0.262 | 15.5 | 46.6 |
| | VR□F | -35 | D | -200 | 57 | 22.0 | 66.0 | 2340 | 1170 | 0.269 | 37.0 | 111 |
| 1/45 | VR□F | -45 | C | -50 | 44.4 | 5.80 | 17.4 | 1670 | 833 | 0.0285 | 9.50 | 28.6 |
| | VR□F | -45 | D | -100 | 44.4 | 14.0 | 42.1 | 2060 | 1030 | 0.0285 | 28.3 | 85.2 |
| | VR□F | -45 | D | -200 | 44.4 | 28.3 | 85.2 | 2060 | 1030 | 0.0285 | 28.3 | 85.2 |
| 1/81 | VR□F | -81 | C | -50 | 24.6 | 9.70 | 29.2 | 1670 | 833 | 0.0270 | 9.70 | 29.2 |
| | VR□F | -81 | D | -100 | 24.6 | 17.8 | 53.5 | 2060 | 1030 | 0.0300 | 17.8 | 53.5 |

注1) 输入轴换算内部惯性力矩仅为减速机的数值，不包括马达的惯性力矩。请将其作为参考值。
注2) 容许径向负荷为输出轴中央部的数值。
注3) 全部为斜齿轮适用范围。
Note 1) The moment of inertia of input shaft conversion is only gained from the reducer, so it does not include moment of inertia of the motor.
Note 2) The permissible radial load is indicated on the center of the output shaft.
Note 3) All values are within the range corresponding to helical gear.

# 尺寸图（细长型VRSF系列）
# DIMENSIONAL DRAWING & TABLE (CYLINDER TYPE-MATCHED VRSF SERIES)

## 机械参数 DIMENSIONS

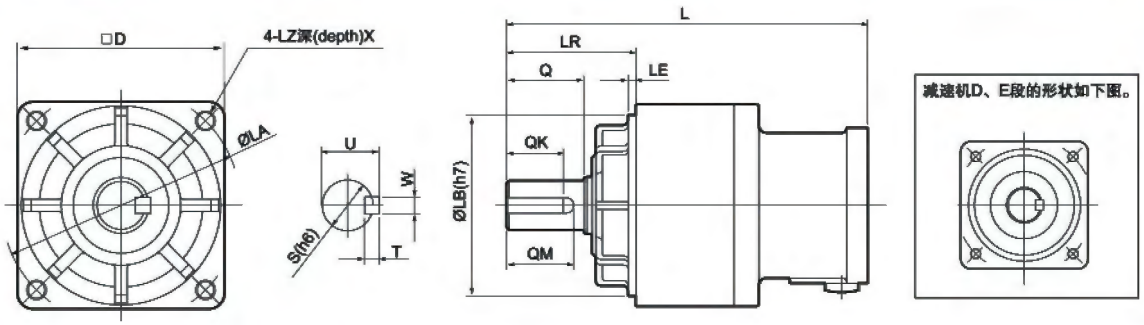


■ VR同芯轴型减速机尺寸表 Dimensional Table For VR Concentric Shaft Reducer

单位Unit: mm

| 型号 Type | | | | 全长 Total length L | | | 输出轴 Output shaft | | | | | | | 法兰 Flange | | | | | |
|---|---|---|---|---|---|---|---|---|---|---|---|---|---|---|---|---|---|---|---|
| 机种 Model | 减速比 Reduction ratio | 段位号 Type no. | 马达功率 Motor | 松下电器生产 Panasonic-made MSMA | 安川电机生产 Yaskawa-made SGMASH SGMSH | 三菱电机生产 Mitsubishi-made HC-KFS HC-RFS | LR | S | Q | QM | QK | W x U | T | D | LB | LE | LA | LZ | X |
| VRSF | 3·5·9 | B | 50 | 99.5 | | | 32 | 12 | 20 | 18 | 16 | 4x13.5 | 4 | 52 | 50 | 3 | 60 | M5 | 12 |
| VRSF | 15·20·25·35 | B | 50 | 110 | | | | | | | | | | | | | | | |
| VRSF | 3·5·9 | B | 100 | 99.5 | | | | | | | | | | | | | | | |
| VRSF | 15·20·25 | B | 100 | 110 | | | | | | | | | | | | | | | |
| VRSF | 3·5 | B | 200 | 104.5 | | | | | | | | | | | | | | | |
| VRSF | 3 | B | 400 | | | | | | | | | | | | | | | | |
| VRSF | 45·81 | C | 50 | 142 | | | 50 | 19 | 30 | 26 | 22 | 6x21.5 | 6 | 78 | 70 | 3 | 90 | M6 | 20 |
| VRSF | 35 | C | 100 | 150 | | | | | | | | | | | | | | | |
| VRSF | 45 | C | 100 | 142 | | | | | | | | | | | | | | | |
| VRSF | 9 | C | 200 | 139.5 | | | | | | | | | | | | | | | |
| VRSF | 15·20·25·35 | C | 200 | 150 | | | | | | | | | | | | | | | |
| VRSF | 5·9 | C | 400 | 139.5 | | | | | | | | | | | | | | | |
| VRSF | 15·20·25 | C | 400 | 150 | | | | | | | | | | | | | | | |
| VRSF | 3·5 | C | 750 | 143.5 | | | | | | | | | | | | | | | |
| VRSF | 81 | D | 100 | 158 | | | 61 | 24 | 40 | 35 | 30 | 8x27 | 7 | 98 | 90 | 5 | 115 | M8 | 20 |
| VRSF | 45 | D | 200 | 165 | | | | | | | | | | | | | | | |
| VRSF | 35 | D | 400 | | | | | | | | | | | | | | | | |
| VRSF | 9 | D | 750 | 158.5 | | | | | | | | | | | | | | | |
| VRSF | 15·20·25 | D | 750 | 171 | | | | | | | | | | | | | | | |
| VRSF | 3·5 | D | 1000 | 177 | | | | | | | | | | | | | | | |
| VRSF | 3·5 | D | 1500 | | | | | | | | | | | | | | | | |
| VRSF | 3 | D | 2000 | | | | | | | | | | | | | | | | |
| VRSF | 81 | E | 200 | 210 | | | 75 | 32 | 55 | 52 | 45 | 10x35 | 8 | 125 | 110 | 5 | 135 | M10 | 20 |
| VRSF | 45 | E | 400 | | | | | | | | | | | | | | | | |
| VRSF | 35 | E | 750 | | | | | | | | | | | | | | | | |
| VRSF | 45 | E | 750 | 235 | | | | | | | | | | | | | | | |
| VRSF | 9 | E | 1000 | 215 | | | | | | | | | | | | | | | |
| VRSF | 15·25 | E | 1000 | 235 | | | | | | | | | | | | | | | |
| VRSF | 9 | E | 1500 | 215 | | | | | | | | | | | | | | | |
| VRSF | 15 | E | 1500 | 235 | | | | | | | | | | | | | | | |
| VRSF | 5·9 | E | 2000 | 215 | | | | | | | | | | | | | | | |
| VRSF | 15 | E | 2000 | 235 | | | | | | | | | | | | | | | |
| VRSF | 3·5·9 | E | 2500 | 215 | - | - | | | | | | | | | | | | | |
| VRSF | 3·5·9 | E | 3000 | 215 | 225 | - | | | | | | | | | | | | | |
| VRSF | 3·5 | E | 3500 | 215 | - | 225 | | | | | | | | | | | | | |
| VRSF | 3·5 | E | 4000 | 225 | 225 | - | | | | | | | | | | | | | |
| VRSF | 3 | E | 4500 | 225 | - | - | | | | | | | | | | | | | |
| VRSF | 3 | E | 5000 | 225 | | | | | | | | | | | | | | | |

注1) 基准机种(马达对应表记载系列)以外的马达，请咨询。（因为根据马达安装的不同法兰尺寸可能不同）
注2) 输出轴旋转方向与马达输入旋转方向相同。
注3) 全部为斜齿轮适用范围。

Note 1) Please inquire to us if motor model isn't standard (Matching motor list).(The flange dimension may be different if motor assembly dimension is different.)
Note 2) Rotation of the output shaft is in the same direction as that of motor input.
Note 3) All values are within the range corresponding to helical gear.

# 50W 尺寸图与性能表
# 50W DIMENSIONAL DRAWING & PERFORMANCE TABLE

## ■ 性能表 Performance Table (输入转速为3,000rpm时 When input speed is 3000rpm)

| 额定输入马达功率 Rated input motor | 减速比 Reduction ratio | 型号 Type | | | | 输出轴转速 Output shaft speed | 额定输出扭矩 Standard output torque | 瞬间最大输出扭矩 Instantaneous max. output torque | 容许径向负荷 Permissible radial load | 容许轴向负荷 Permissible axial load | 输入轴换算内部惯性力矩 Internal moment of inertia of input shaft conversion | 容许输出扭矩 Permissible output torque | 瞬间最大容许输出扭矩 Instantaneous max. permissible output torque |
|---|---|---|---|---|---|---|---|---|---|---|---|---|---|
| | | 机种 Model | 减速比 Reduction ratio | 段位号 Type no. | 马达功率 Motor | (rpm) | (N·m) | (N·m) | (N) | (N) | ($10^{-4}$×kg·m²) | (N·m) | (N·m) |
| 50W | 1/3 | VRSF | 3 | B | 50 | 1000 | 0.255 | 0.784 | 392 | 196 | 0.0575 | 3.43 | 10.3 |
| | 1/5 | VRSF | 5 | B | 50 | 600 | 0.510 | 1.47 | 490 | 245 | 0.0400 | 1.57 | 4.70 |
| | 1/9 | VRSF | 9 | B | 50 | 333 | 0.921 | 2.74 | 588 | 294 | 0.0350 | 2.35 | 7.25 |
| | 1/15 | VRSF | 15 | B | 50 | 200 | 1.67 | 5.00 | 784 | 392 | 0.0350 | 4.02 | 12.2 |
| | 1/20 | VRSF | 20 | B | 50 | 150 | 2.21 | 6.63 | 804 | 402 | 0.0340 | 5.00 | 15.0 |
| | 1/25 | VRSF | 25 | B | 50 | 120 | 2.74 | 8.33 | 882 | 441 | 0.0325 | 4.02 | 12.2 |
| | 1/35 | VRSF | 35 | B | 50 | 85 | 3.84 | 11.5 | 882 | 441 | 0.0300 | 3.84 | 11.5 |
| | 1/45 | VRSF | 45 | C | 50 | 66 | 3.86 | 11.6 | 1670 | 833 | 0.0285 | 9.50 | 28.6 |
| | 1/81 | VRSF | 81 | C | 50 | 37 | 7.02 | 20.8 | 1670 | 833 | 0.0270 | 9.70 | 29.2 |

注1) 安装基准机种（马达适用表记载系列）以外的马达时，每次都要与我们联系。（法兰尺寸可能不同）
注2) 输入轴换算惯性力矩仅为减速机的数值，不包括马达的惯性力矩。
注3) 最高输入转速为5000rpm。正常情况下请转速控制在3000rpm以下。
注4) 容许径向负荷表示输出轴中央部位的值。
注5) 全部为斜齿轮适用范围。
注6) 马达的安装顺序请参照P.46
注7) 输出轴旋转方向与马达输入旋转方向相同。

Note 1) In case of attachment to a motor beyond the standard models(motor matching series), contact us.(How to measure dimensions of the flange may be changed in some cases.)
Note 2) The moment of inertia of input shaft conversion is only gained from the reducer, so it does not include moment of inertia of the motor.
Note 3) The max. input speed is 5000rpm, and usually set to 3000rpm or less.
Note 4) The permissible radial load is indicated on the center of the output shaft.
Note 5) All values are within the range corresponding to helical gear.
Note 6) For motor assembly procedure, see 46 page.
Note 7) Rotation of the output shaft is in the same direction as motor.

## ■ 尺寸图 Dimensional Drawing

### VRSF-3B·5B·9B-50

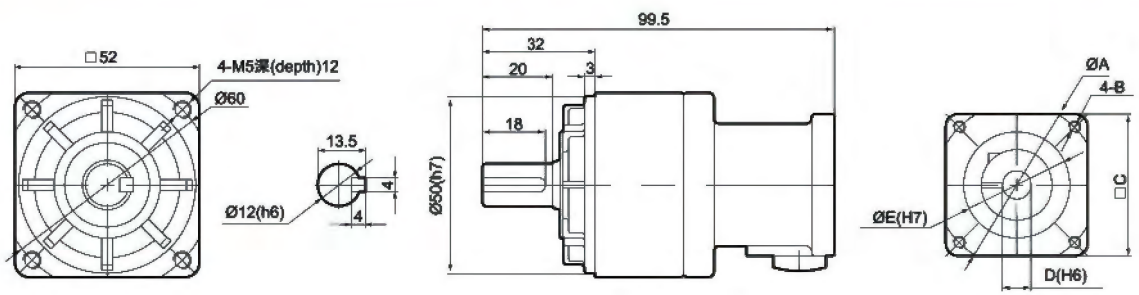


- 概略重量0.55kg
- Rough weight 0.55kg
- TYPE1～3的详细情况请参照P.44
- For details of TYPE1～3, see 44 page.

■法兰部位详细尺寸表Detailed flange dimensions table（单位Unit: mm）

| 马达种类Motor type | A | B | C | D | E |
|---|---|---|---|---|---|
| TYPE 1 | 45 | M3 | 38 | 8 | 30 |
| TYPE 2 | 46 | M4 | 40 | 6 | 30 |
| TYPE 3 | 46 | M4 | 40 | 8 | 30 |

# 50W 尺寸图与性能表
# 50W DIMENSIONAL DRAWING & PERFORMANCE TABLE

## ■ 尺寸图 Dimensional Drawing

### VRSF-15B·20B·25B·35B-50

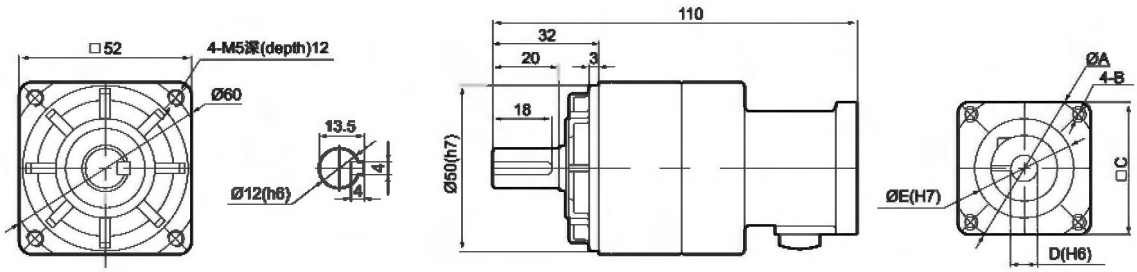


●概略重量0.7kg
●Rough weight 0.7kg
●TYPE1～3的详细情况请参照P.44
●For details of TYPE1～3, see 44 page.

■法兰部位详细尺寸表Detailed flange dimensions table（单位Unit: mm）

| 马达种类Motor type | A | B | C | D | E |
|---|---|---|---|---|---|
| TYPE 1 | 45 | M3 | 38 | 8 | 30 |
| TYPE 2 | 46 | M4 | 40 | 6 | 30 |
| TYPE 3 | 46 | M4 | 40 | 8 | 30 |

## ■ 尺寸图 Dimensional Drawing

### VRSF-45C·81C-50

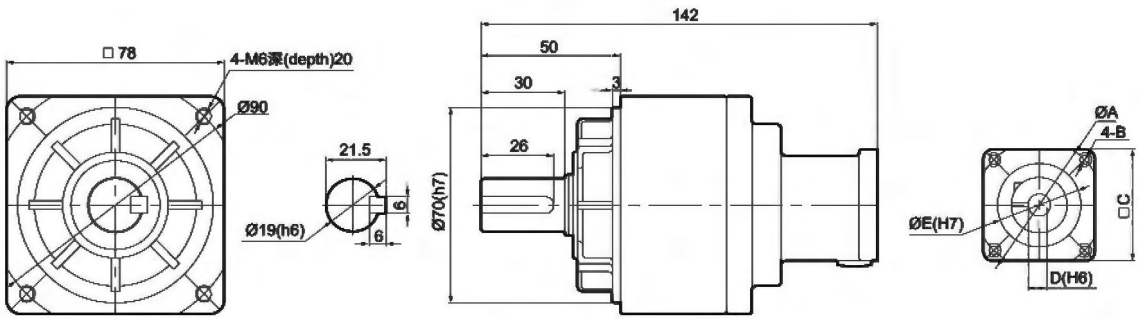


●概略重量1.7kg
●Rough weight 1.7kg
●TYPE1～3的详细情况请参照P.44
●For details of TYPE1～3, see 44 page.

■法兰部位详细尺寸表Detailed flange dimensions table（单位Unit: mm）

| 马达种类Motor type | A | B | C | D | E |
|---|---|---|---|---|---|
| TYPE 1 | 45 | M3 | 38 | 8 | 30 |
| TYPE 2 | 46 | M4 | 40 | 6 | 30 |
| TYPE 3 | 46 | M4 | 40 | 8 | 30 |

# 100W 尺寸图与性能表
# 100W DIMENSIONAL DRAWING & PERFORMANCE TABLE

YKA TRANSMISSION MACHINE 宜昌·全球动力专家

## ■ 性能表 Performance Table (输入转速为3,000rpm时 When input speed is 3000rpm)

| 额定输入马达功率 Rated input motor | 减速比 Reduction ratio | 型号 Type | | | | 输出轴转速 Output shaft speed | 额定输出扭矩 Standard output torque | 瞬间最大输出扭矩 Instantaneous max. output torque | 容许径向负荷 Permissible radial load | 容许轴向负荷 Permissible axial load | 输入轴换算内部惯性力矩 Internal moment of inertia of input shaft conversion | 容许输出扭矩 Permissible output torque | 瞬间最大容许输出扭矩 Instantaneous max. permissible output torque |
|---|---|---|---|---|---|---|---|---|---|---|---|---|---|
| | | 机种 Model | 减速比 Reduction ratio | 段位号 Type no. | 马达功率 Motor | (rpm) | (N·m) | (N·m) | (N) | (N) | ($10^{-4}$×kg·m²) | (N·m) | (N·m) |
| 100W | 1/3 | VRSF | 3 | B | 100 | 1000 | 0.715 | 2.06 | 392 | 196 | 0.0575 | 3.43 | 10.3 |
| | 1/5 | VRSF | 5 | B | 100 | 600 | 1.18 | 3.72 | 490 | 245 | 0.0400 | 1.57 | 4.70 |
| | 1/9 | VRSF | 9 | B | 100 | 333 | 2.25 | 6.86 | 588 | 294 | 0.0350 | 2.35 | 7.25 |
| | 1/15 | VRSF | 15 | B | 100 | 200 | 3.72 | 11.4 | 784 | 392 | 0.0350 | 4.02 | 12.2 |
| | 1/20 | VRSF | 20 | B | 100 | 150 | 5.00 | 15.0 | 804 | 402 | 0.0340 | 5.00 | 15.0 |
| | 1/25 | VRSF | 25 | B | 100 | 120 | 6.27 | 19.0 | 882 | 441 | 0.0325 | 6.27 | 19.0 |
| | 1/35 | VRSF | 35 | C | 100 | 85 | 7.24 | 21.7 | 1670 | 833 | 0.0650 | 13.9 | 41.7 |
| | 1/45 | VRSF | 45 | C | 100 | 66 | 9.31 | 28.0 | 1670 | 833 | 0.0285 | 9.50 | 28.6 |
| | 1/81 | VRSF | 81 | D | 100 | 37 | 14.0 | 42.0 | 2060 | 1030 | 0.0300 | 17.8 | 53.5 |

注1) 安装基准机种（马达适用表记载系列）以外的马达时，每次都要与我们联系。（法兰尺寸可能不同）
注2) 输入轴换算惯性力矩仅为减速机的数值，不包括马达的惯性力矩。
注3) 最高输入转速为5000rpm。正常情况下请转速控制在3000rpm以下。
注4) 容许径向负荷表示输出轴中央部位的值。
注5) 全部为斜齿轮适用范围。
注6) 马达的安装顺序请参照P.46
注7) 输出轴旋转方向与马达输入旋转方向相同。

Note 1) In case of attachment to a motor beyond the standard models(motor matching series), contact us.(How to measure dimensions of the flange may be changed in some cases.)
Note 2) The moment of inertia of input shaft conversion is only gained from the reducer, so it does not include moment of inertia of the motor.
Note 3) The max. input speed is 5000rpm, and usually set to 3000rpm or less.
Note 4) The permissible radial load is indicated on the center of the output shaft.
Note 5) All values are within the range corresponding to helical gear.
Note 6) For motor assembly procedure, see 46 page.
Note 7) Rotation of the output shaft is in the same direction as motor.

## ■ 尺寸图 Dimensional Drawing

### VRSF-3B·5B·9B-100

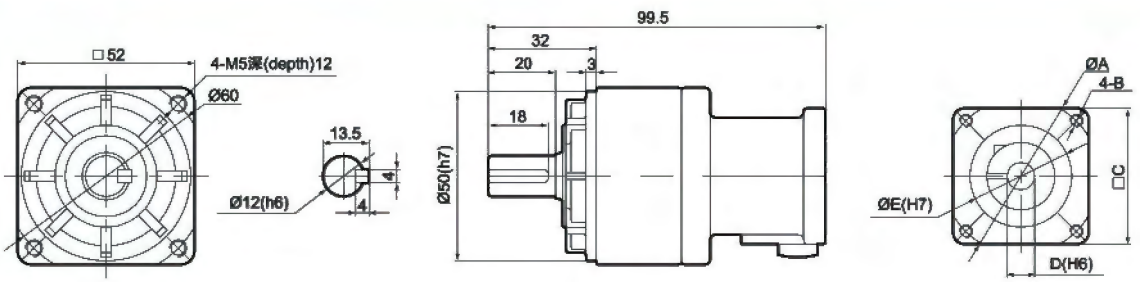


- 概略重量0.55kg
- Rough weight 0.55kg
- TYPE1~3的详细情况请参照P.44
- For details of TYPE1~3, see 44 page.

■法兰部位详细尺寸表Detailed flange dimensions table (单位Unit: mm)

| 马达种类Motor type | A | B | C | D | E |
|---|---|---|---|---|---|
| TYPE 1 | 45 | M3 | 38 | 8 | 30 |
| TYPE 2 | 46 | M4 | 40 | 8 | 30 |
| TYPE 3 | 46 | M4 | 40 | 8 | 30 |

### VRSF-15B·20B·25B-100

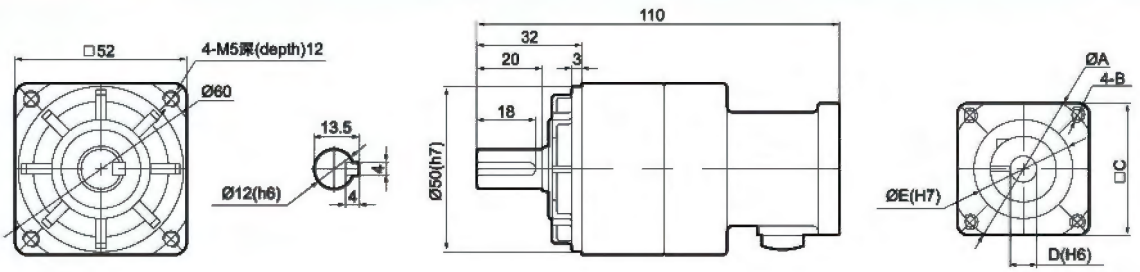


- 概略重量0.7kg
- Rough weight 0.7kg
- TYPE1~3的详细情况请参照P.44
- For details of TYPE1~3, see 44 page.

■法兰部位详细尺寸表Detailed flange dimensions table (单位Unit: mm)

| 马达种类Motor type | A | B | C | D | E |
|---|---|---|---|---|---|
| TYPE 1 | 45 | M3 | 38 | 8 | 30 |
| TYPE 2 | 46 | M4 | 40 | 8 | 30 |
| TYPE 3 | 46 | M4 | 40 | 8 | 30 |

# 100W 尺寸图与性能表
# 100W DIMENSIONAL DRAWING & PERFORMANCE TABLE

## ■ 尺寸图 Dimensional Drawing

### VRSF-35C-100

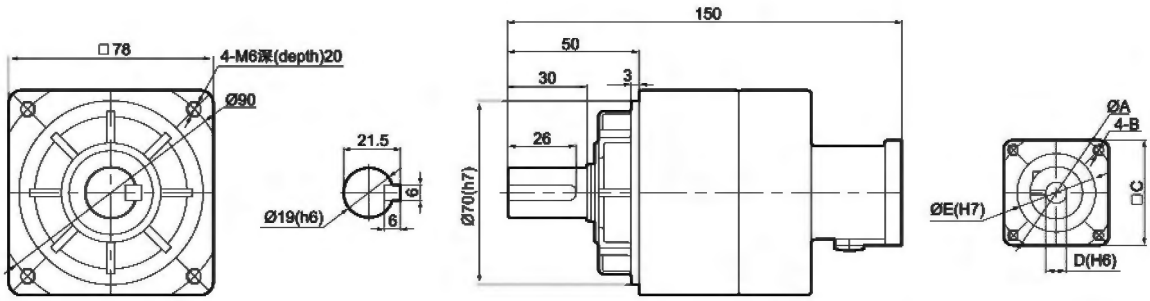


●概略重量2.0kg
●Rough weight 2.0kg
●TYPE1～3的详细情况请参照P.44
●For details of TYPE1～3, see 44 page.

■法兰部位详细尺寸表Detailed flange dimensions table（单位Unit: mm）

| 马达种类Motor type | A | B | C | D | E |
|---|---|---|---|---|---|
| TYPE 1 | 45 | M3 | 38 | 8 | 30 |
| TYPE 2 | 46 | M4 | 40 | 8 | 30 |
| TYPE 3 | 46 | M4 | 40 | 8 | 30 |

### VRSF-45C-100

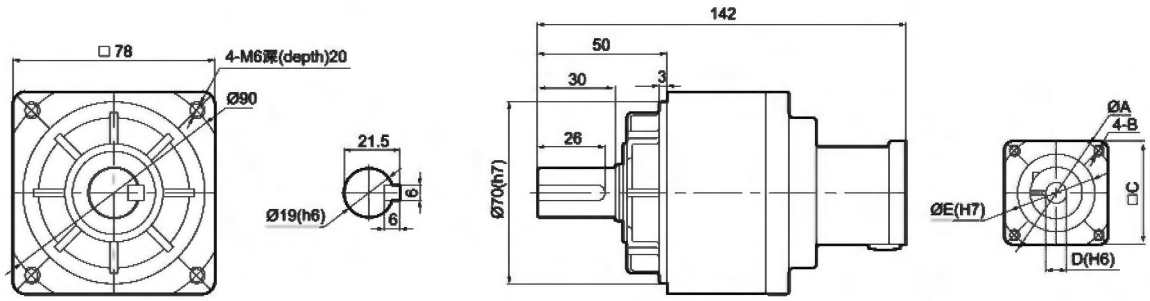


●概略重量1.7kg
●Rough weight 1.7kg
●TYPE1～3的详细情况请参照P.44
●For details of TYPE1～3, see 44 page.

■法兰部位详细尺寸表Detailed flange dimensions table（单位Unit: mm）

| 马达种类Motor type | A | B | C | D | E |
|---|---|---|---|---|---|
| TYPE 1 | 45 | M3 | 38 | 8 | 30 |
| TYPE 2 | 46 | M4 | 40 | 8 | 30 |
| TYPE 3 | 46 | M4 | 40 | 8 | 30 |

### VRSF-81D-100

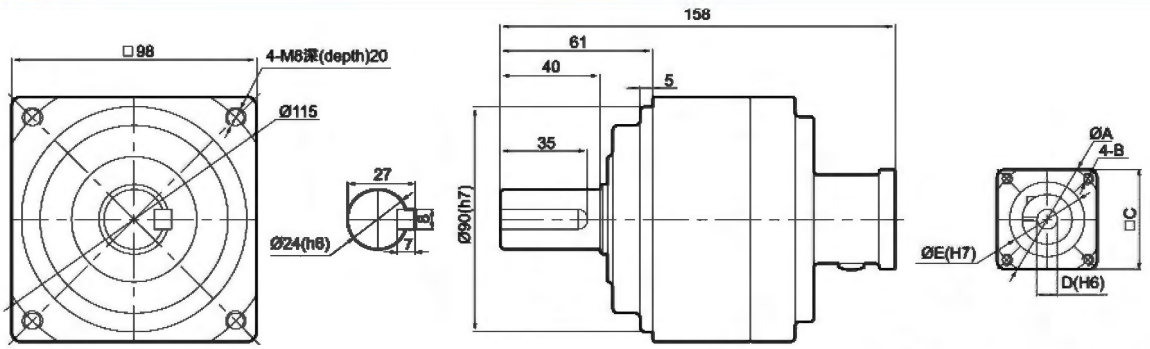


●概略重量3.0kg
●Rough weight 3.0kg
●TYPE1～3的详细情况请参照P.44
●For details of TYPE1～3, see 44 page.

■法兰部位详细尺寸表Detailed flange dimensions table（单位Unit: mm）

| 马达种类Motor type | A | B | C | D | E |
|---|---|---|---|---|---|
| TYPE 1 | 45 | M3 | 38 | 8 | 30 |
| TYPE 2 | 46 | M4 | 40 | 8 | 30 |
| TYPE 3 | 46 | M4 | 40 | 8 | 30 |

# 200W 尺寸图与性能表
# 200W DIMENSIONAL DRAWING & PERFORMANCE TABLE

## ■ 性能表 Performance Table (输入转速为3,000rpm时 When input speed is 3000rpm)

| 额定输入马达功率 Rated input motor | 减速比 Reduction ratio | 型号 Type | | | | 输出轴转速 Output shaft speed | 额定输出扭矩 Standard output torque | 瞬间最大输出扭矩 Instantaneous max. output torque | 容许径向负荷 Permissible radial load | 容许轴向负荷 Permissible axial load | 输入轴换算内部惯性力矩 Internal moment of inertia of input shaft conversion | 容许输出扭矩 Permissible output torque | 瞬间最大容许输出扭矩 Instantaneous max. permissible output torque |
|---|---|---|---|---|---|---|---|---|---|---|---|---|---|
| | | 机种 Model | 减速比 Reduction ratio | 段位号 Type no. | 马达功率 Motor | (rpm) | (N·m) | (N·m) | (N) | (N) | ($10^{-4}$×kg·m²) | (N·m) | (N·m) |
| 200W | 1/3 | VRSF | 3 | B | 200 | 1000 | 1.47 | 4.51 | 392 | 196 | 0.135 | 3.43 | 10.3 |
| | 1/5 | VRSF | 5 | B | 200 | 600 | 2.65 | 8.04 | 490 | 245 | 0.118 | 2.84 | 8.53 |
| | 1/9 | VRSF | 9 | C | 200 | 333 | 3.72 | 11.3 | 1180 | 588 | 0.275 | 9.70 | 29.2 |
| | 1/15 | VRSF | 15 | C | 200 | 200 | 6.27 | 18.8 | 1470 | 735 | 0.300 | 16.2 | 48.6 |
| | 1/20 | VRSF | 20 | C | 200 | 150 | 8.69 | 26.1 | 1570 | 785 | 0.294 | 21.1 | 63.3 |
| | 1/25 | VRSF | 25 | C | 200 | 120 | 11.1 | 33.3 | 1670 | 833 | 0.288 | 21.7 | 64.9 |
| | 1/35 | VRSF | 35 | C | 200 | 85 | 15.5 | 46.6 | 1670 | 833 | 0.262 | 15.5 | 46.6 |
| | 1/45 | VRSF | 45 | D | 200 | 66 | 21.1 | 63.5 | 2060 | 1030 | 0.0256 | 28.3 | 85.2 |
| | 1/81 | VRSF | 81 | E | 200 | 37 | 36.1 | 108.3 | 3530 | 1765 | 0.240 | 43.3 | 129.9 |

注1) 安装基准机种（马达适用表记载系列）以外的马达时，每次都要与我们联系。（法兰尺寸可能不同）
注2) 输入轴换算惯性力矩仅为减速机的数值，不包括马达的惯性力矩。
注3) 最高输入转速为5000rpm。正常情况下请转速控制在3000rpm以下。
注4) 容许径向负荷表示输出轴中央部位的值。
注5) 全部为斜齿轮适用范围。
注6) 马达的安装顺序请参照P.46
注7) 输出轴旋转方向与马达输入旋转方向相同。

Note 1) In case of attachment to a motor beyond the standard models(motor matching series), contact us.(How to measure dimensions of the flange may be changed in some cases.)
Note 2) The moment of inertia of input shaft conversion is only gained from the reducer, so it does not include moment of inertia of the motor.
Note 3) The max. input speed is 5000rpm, and usually set to 3000rpm or less.
Note 4) The permissible radial load is indicated on the center of the output shaft.
Note 5) All values are within the range corresponding to helical gear.
Note 6) For motor assembly procedure, see 46 page.
Note 7) Rotation of the output shaft is in the same direction as motor.

## ■ 尺寸图 Dimensional Drawing

### VRSF-3B·5B-200

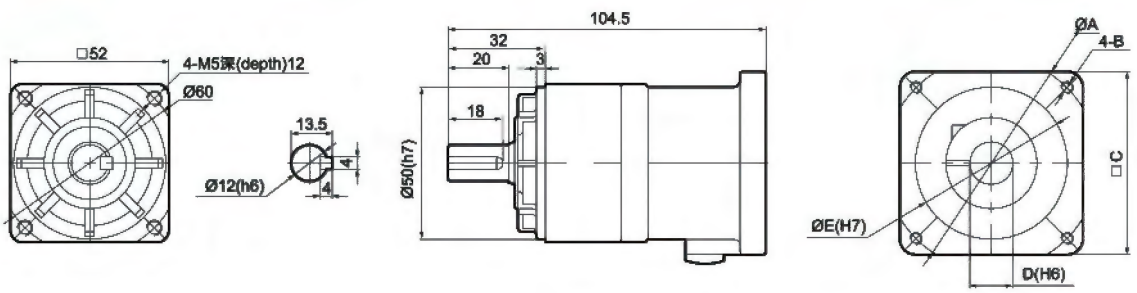


- 概略重量0.72kg
- Rough weight 0.72kg
- TYPE1~3的详细情况请参照P.44
- For details of TYPE1~3, see 44 page.

■法兰部位详细尺寸表Detailed flange dimensions table (单位Unit: mm)

| 马达种类Motor type | A | B | C | D | E |
|---|---|---|---|---|---|
| TYPE 1 | 70 | M4 | 60 | 11 | 50 |
| TYPE 2 | 70 | M5 | 60 | 14 | 50 |
| TYPE 3 | 70 | M5 | 60 | 14 | 50 |

### VRSF-9C-200

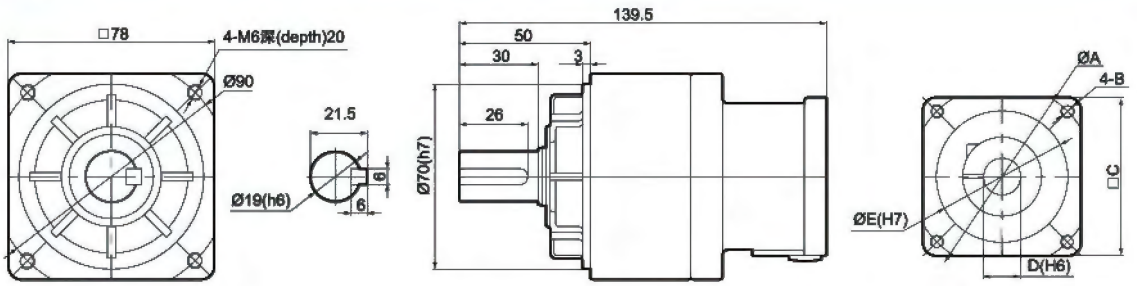


- 概略重量1.7kg
- Rough weight 1.7kg
- TYPE1~3的详细情况请参照P.44
- For details of TYPE1~3, see 44 page.

■法兰部位详细尺寸表Detailed flange dimensions table (单位Unit: mm)

| 马达种类Motor type | A | B | C | D | E |
|---|---|---|---|---|---|
| TYPE 1 | 70 | M4 | 60 | 11 | 50 |
| TYPE 2 | 70 | M5 | 60 | 14 | 50 |
| TYPE 3 | 70 | M5 | 60 | 14 | 50 |

# 200W 尺寸图与性能表
# 200W DIMENSIONAL DRAWING & PERFORMANCE TABLE

## ■ 尺寸图 Dimensional Drawing

### VRSF-15C·20C·25C·35C-200

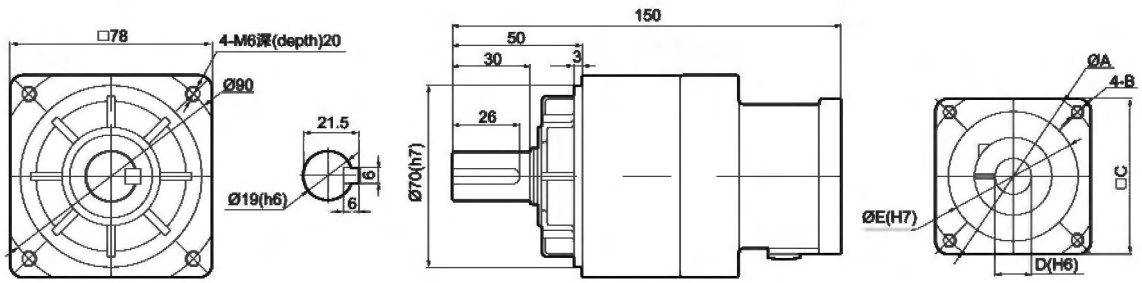


●概略重量2.1kg
●Rough weight 2.1kg
●TYPE1~3的详细情况请参照P.44
●For details of TYPE1~3, see 44 page.

■法兰部位详细尺寸表Detailed flange dimensions table（单位Unit: mm）

| 马达种类Motor type | A | B | C | D | E |
|---|---|---|---|---|---|
| TYPE 1 | 70 | M4 | 60 | 11 | 50 |
| TYPE 2 | 70 | M5 | 60 | 14 | 50 |
| TYPE 3 | 70 | M5 | 60 | 14 | 50 |

### VRSF-45D-200

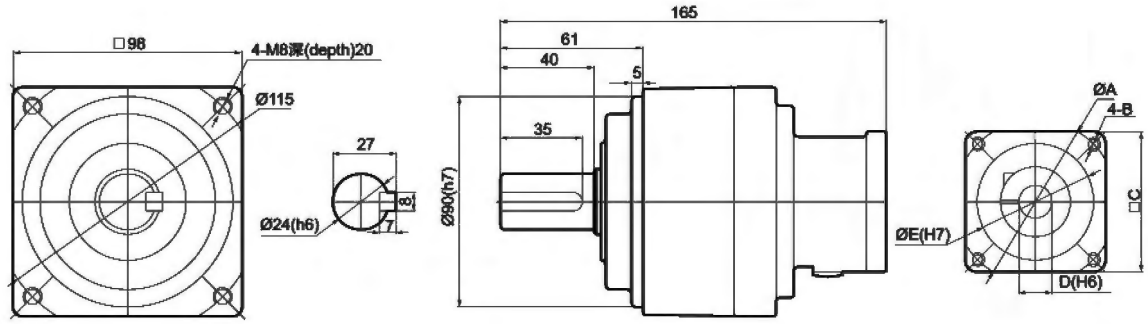


●概略重量3.2kg
●Rough weight 3.2kg
●TYPE1~3的详细情况请参照P.44
●For details of TYPE1~3, see 44 page.

■法兰部位详细尺寸表Detailed flange dimensions table（单位Unit: mm）

| 马达种类Motor type | A | B | C | D | E |
|---|---|---|---|---|---|
| TYPE 1 | 70 | M4 | 60 | 11 | 50 |
| TYPE 2 | 70 | M5 | 60 | 14 | 50 |
| TYPE 3 | 70 | M5 | 60 | 14 | 50 |

### VRSF-81E-200

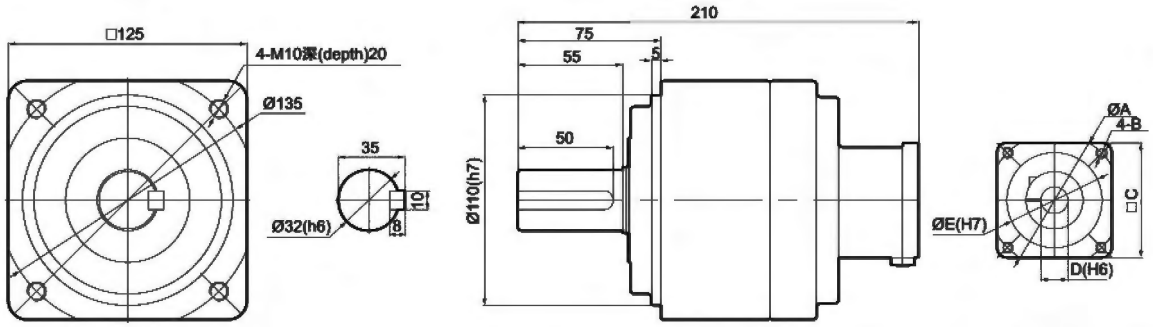


●概略重量3.0kg
●Rough weight 3.0kg
●TYPE1~3的详细情况请参照P.44
●For details of TYPE1~3, see 44 page.

■法兰部位详细尺寸表Detailed flange dimensions table（单位Unit: mm）

| 马达种类Motor type | A | B | C | D | E |
|---|---|---|---|---|---|
| TYPE 1 | 70 | M4 | 60 | 11 | 50 |
| TYPE 2 | 70 | M5 | 60 | 14 | 50 |
| TYPE 3 | 70 | M5 | 60 | 14 | 50 |

# 400W 尺寸图与性能表
# 400W DIMENSIONAL DRAWING & PERFORMANCE TABLE

YKA TRANSMISSION MACHINE 宜昌·全球动力专家

## ■ 性能表 Performance Table (输入转速为3,000rpm时 When input speed is 3000rpm)

| 额定输入马达功率 Rated input motor | 减速比 Reduction ratio | 型号 Type | | | | 输出轴转速 Output shaft speed | 额定输出扭矩 Standard output torque | 瞬间最大输出扭矩 Instantaneous max. output torque | 容许径向负荷 Permissible radial load | 容许轴向负荷 Permissible axial load | 输入轴换算内部惯性力矩 Internal moment of inertia of input shaft conversion | 容许输出扭矩 Permissible output torque | 瞬间最大容许输出扭矩 Instantaneous max. permissible output torque |
|---|---|---|---|---|---|---|---|---|---|---|---|---|---|
| | | 机种 Model | 减速比 Reduction ratio | 段位号 Type no. | 马达功率 Motor | (rpm) | (N·m) | (N·m) | (N) | (N) | ($10^{-4}$×kg·m²) | (N·m) | (N·m) |
| 400W | 1/3 | VRSF | 3 | B | 400 | 1000 | 3.43 | 10.3 | 392 | 196 | 0.145 | 3.43 | 10.3 |
| | 1/5 | VRSF | 5 | C | 400 | 600 | 5.39 | 16.2 | 980 | 490 | 0.363 | 6.57 | 19.7 |
| | 1/9 | VRSF | 9 | C | 400 | 333 | 9.51 | 28.5 | 1180 | 588 | 0.275 | 9.70 | 29.2 |
| | 1/15 | VRSF | 15 | C | 400 | 200 | 15.8 | 47.5 | 1470 | 735 | 0.300 | 16.2 | 48.6 |
| | 1/20 | VRSF | 20 | C | 400 | 150 | 21.1 | 63.3 | 1570 | 785 | 0.294 | 21.1 | 63.3 |
| | 1/25 | VRSF | 25 | C | 400 | 120 | 26.4 | 79.2 | 1670 | 833 | 0.288 | 26.4 | 79.2 |
| | 1/35 | VRSF | 35 | D | 400 | 85 | 37.0 | 111 | 2060 | 1030 | 0.269 | 37.0 | 111 |
| | 1/45 | VRSF | 45 | E | 400 | 66 | 47.5 | 142.5 | 3520 | 1760 | 0.245 | 57 | 171 |

注1) 安装基准机种（马达适用表记载系列）以外的马达时，每次都要与我们联系。（法兰尺寸可能不同）
注2) 输入轴换算惯性力矩仅为减速机的数值，不包括马达的惯性力矩。
注3) 最高输入转速为5000rpm。正常情况下请转速控制在3000rpm以下。
注4) 容许径向负荷表示输出轴中央部位的值。
注5) 全部为斜齿轮适用范围。
注6) 马达的安装顺序请参照P.46
注7) 输出轴旋转方向与马达输入旋转方向相同。

Note 1) In case of attachment to a motor beyond the standard models(motor matching series), contact us.(How to measure dimensions of the flange may be changed in some cases.)
Note 2) The moment of inertia of input shaft conversion is only gained from the reducer, so it does not include moment of inertia of the motor.
Note 3) The max. input speed is 5000rpm, and usually set to 3000rpm or less.
Note 4) The permissible radial load is indicated on the center of the output shaft.
Note 5) All values are within the range corresponding to helical gear.
Note 6) For motor assembly procedure, see 46 page.
Note 7) Rotation of the output shaft is in the same direction as motor.

## ■ 尺寸图 Dimensional Drawing

### VRSF-3B-400

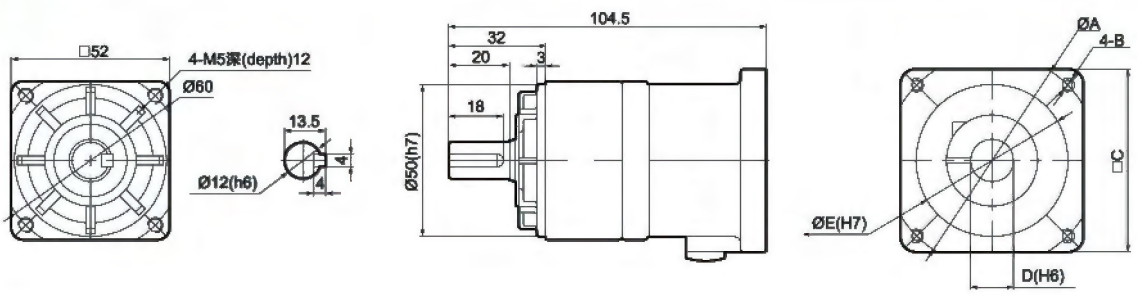


●概略重量0.71kg
●Rough weight 0.71kg
●TYPE1～3的详细情况请参照P.44
●For details of TYPE1～3, see 44 page.

■法兰部位详细尺寸表Detailed flange dimensions table（单位Unit: mm)

| 马达种类Motor type | A | B | C | D | E |
|---|---|---|---|---|---|
| TYPE 1 | 70 | M4 | 60 | 14 | 50 |
| TYPE 2 | 70 | M5 | 60 | 14 | 50 |
| TYPE 3 | 70 | M5 | 60 | 14 | 50 |

### VRSF-5C·9C-400

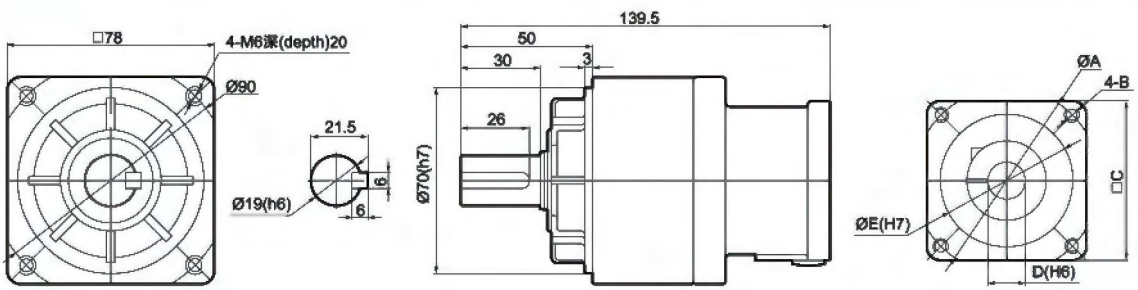


●概略重量1.7kg
●Rough weight 1.7kg
●TYPE1～3的详细情况请参照P.44
●For details of TYPE1～3, see 44 page.

■法兰部位详细尺寸表Detailed flange dimensions table（单位Unit: mm)

| 马达种类Motor type | A | B | C | D | E |
|---|---|---|---|---|---|
| TYPE 1 | 70 | M4 | 60 | 14 | 50 |
| TYPE 2 | 70 | M5 | 60 | 14 | 50 |
| TYPE 3 | 70 | M5 | 60 | 14 | 50 |

# 400W 尺寸图与性能表
# 400W DIMENSIONAL DRAWING & PERFORMANCE TABLE

## ■ 尺寸图 Dimensional Drawing

### VRSF-15C·20C·25C-400

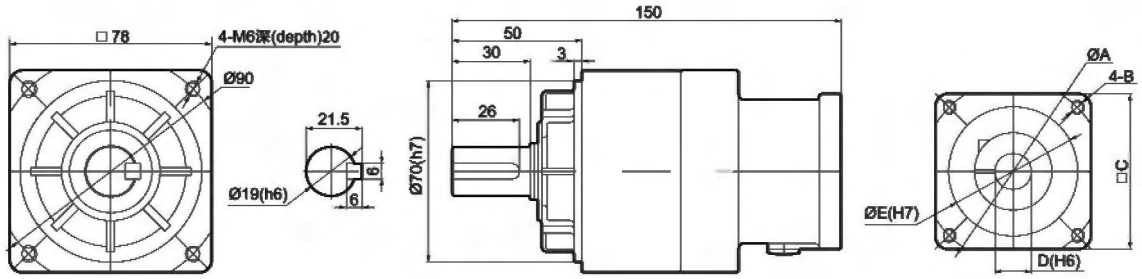


●概略重量2.1kg
●Rough weight 2.1kg
●TYPE1～3的详细情况请参照P.44
●For details of TYPE1～3, see 44 page.

■法兰部位详细尺寸表Detailed flange dimensions table（单位Unit: mm）

| 马达种类Motor type | A | B | C | D | E |
|---|---|---|---|---|---|
| TYPE 1 | 70 | M4 | 60 | 14 | 50 |
| TYPE 2 | 70 | M5 | 60 | 14 | 50 |
| TYPE 3 | 70 | M5 | 60 | 14 | 50 |

### VRSF-35D-400

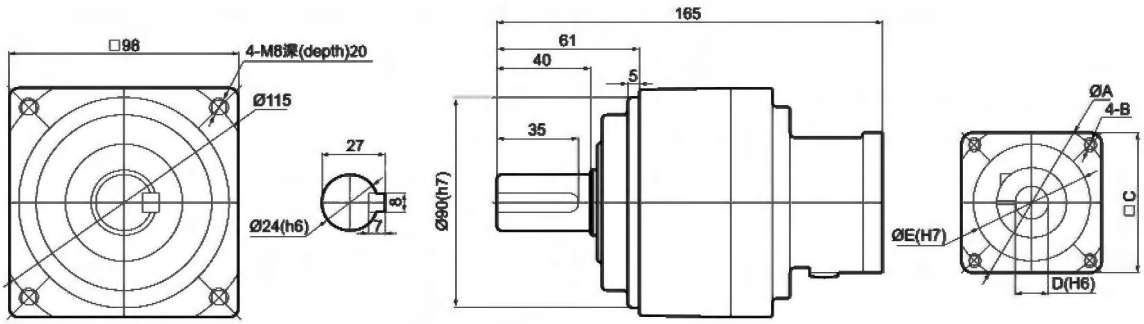


●概略重量3.2kg
●Rough weight 3.2kg
●TYPE1～3的详细情况请参照P.44
●For details of TYPE1～3, see 44 page.

■法兰部位详细尺寸表Detailed flange dimensions table（单位Unit: mm）

| 马达种类Motor type | A | B | C | D | E |
|---|---|---|---|---|---|
| TYPE 1 | 70 | M4 | 60 | 14 | 50 |
| TYPE 2 | 70 | M5 | 60 | 14 | 50 |
| TYPE 3 | 70 | M5 | 60 | 14 | 50 |

### VRSF-45E-400

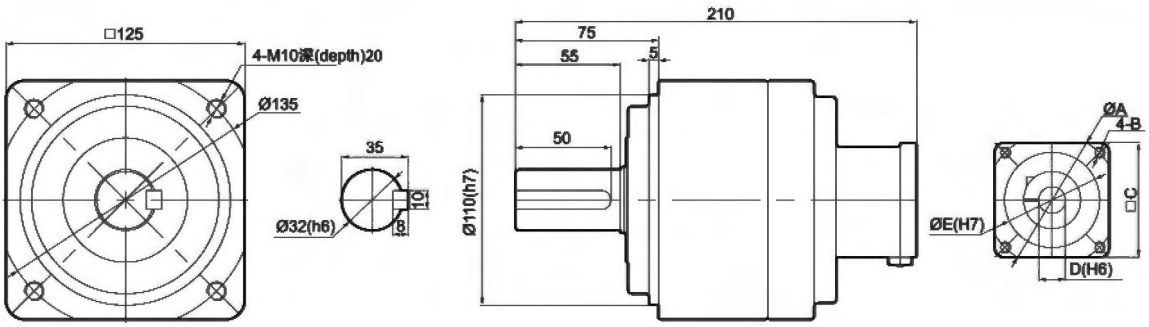


●概略重量7.2kg
●Rough weight 7.2kg
●TYPE1～3的详细情况请参照P.44
●For details of TYPE1～3, see 44 page.

■法兰部位详细尺寸表Detailed flange dimensions table（单位Unit: mm）

| 马达种类Motor type | A | B | C | D | E |
|---|---|---|---|---|---|
| TYPE 1 | 70 | M4 | 60 | 14 | 50 |
| TYPE 2 | 70 | M5 | 60 | 14 | 50 |
| TYPE 3 | 70 | M5 | 60 | 14 | 50 |

# 750W 尺寸图与性能表
# 750W DIMENSIONAL DRAWING & PERFORMANCE TABLE

YKA TRANSMISSION MACHINE 宜昌·全球动力专家

## ■ 性能表 Performance Table (输入转速为3,000rpm时 When input speed is 3000rpm)

| 额定输入马达功率 Rated input motor | 减速比 Reduction ratio | 型号 Type | | | | 输出轴转速 Output shaft speed | 额定输出扭矩 Standard output torque | 瞬间最大输出扭矩 Instantaneous max. output torque | 容许径向负荷 Permissible radial load | 容许轴向负荷 Permissible axial load | 输入轴换算内部惯性力矩 Internal moment of inertia of input shaft conversion | 容许输出扭矩 Permissible output torque | 瞬间最大容许输出扭矩 Instantaneous max. permissible output torque |
|---|---|---|---|---|---|---|---|---|---|---|---|---|---|
| | | 机种 Model | 减速比 Reduction ratio | 段位号 Type no. | 马达功率 Motor | (rpm) | (N·m) | (N·m) | (N) | (N) | ($10^{-4}$×kg·m²) | (N·m) | (N·m) |
| 750W | 1/3 | VRSF | 3 | C | 750 | 1000 | 6.37 | 19.3 | 784 | 392 | 0.913 | 6.86 | 20.6 |
| | 1/5 | VRSF | 5 | C | 750 | 600 | 10.7 | 32.1 | 980 | 490 | 0.713 | 11.5 | 34.3 |
| | 1/9 | VRSF | 9 | D | 750 | 333 | 18.2 | 54.7 | 1470 | 735 | 0.650 | 18.2 | 54.7 |
| | 1/15 | VRSF | 15 | D | 750 | 200 | 30.4 | 91.2 | 1760 | 882 | 0.700 | 30.4 | 91.2 |
| | 1/20 | VRSF | 20 | D | 750 | 150 | 40.6 | 122 | 1910 | 955 | 0.690 | 40.6 | 122 |
| | 1/25 | VRSF | 25 | D | 750 | 120 | 50.7 | 152 | 2060 | 1030 | 0.680 | 50.7 | 152 |
| | 1/35 | VRSF | 35 | E | 750 | 85 | 71.0 | 213 | 3430 | 1715 | 0.473 | 71.0 | 213 |
| | 1/45 | VRSF | 45 | E | 750 | 66 | 91.3 | 274 | 3520 | 1760 | 1.77 | 91.3 | 274 |

注1) 安装基准机种（马达适用表记载系列）以外的马达时，每次都要与我们联系。（法兰尺寸可能不同）
注2) 输入轴换算惯性力矩仅为减速机的数值，不包括马达的惯性力矩。
注3) 最高输入转速为5000rpm。正常情况下请转速控制在3000rpm以下。
注4) 容许径向负荷表示输出轴中央部位的值。
注5) 全部为斜齿轮适用范围。
注6) 马达的安装顺序请参照P.46
注7) 输出轴旋转方向与马达输入旋转方向相同。

Note 1) In case of attachment to a motor beyond the standard models(motor matching series), contact us.(How to measure dimensions of the flange may be changed in some cases.)
Note 2) The moment of inertia of input shaft conversion is only gained from the reducer, so it does not include moment of inertia of the motor.
Note 3) The max. input speed is 5000rpm, and usually set to 3000rpm or less.
Note 4) The permissible radial load is indicated on the center of the output shaft.
Note 5) All values are within the range corresponding to helical gear.
Note 6) For motor assembly procedure, see 46 page.
Note 7) Rotation of the output shaft is in the same direction as motor.

## ■ 尺寸图 Dimensional Drawing

### VRSF-3C·5C-750

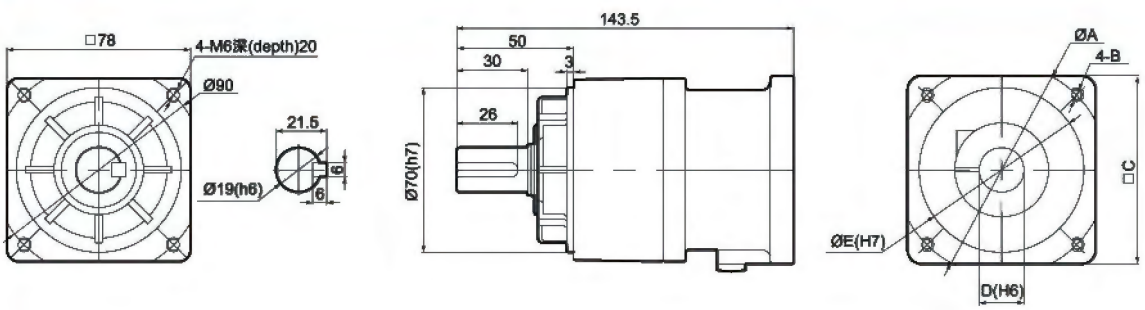


●概略重量2.1kg
●Rough weight 2.1kg
●TYPE1~3的详细情况请参照P.44
●For details of TYPE1~3, see 44 page.

■法兰部位详细尺寸表Detailed flange dimensions table (单位Unit: mm)

| 马达种类Motor type | A | B | C | D | E |
|---|---|---|---|---|---|
| TYPE 1 | 90 | M5 | 80 | 19 | 70 |
| TYPE 2 | 90 | M6 | 80 | 16 | 70 |
| TYPE 3 | 90 | M6 | 80 | 19 | 70 |

### VRSF-9D-750

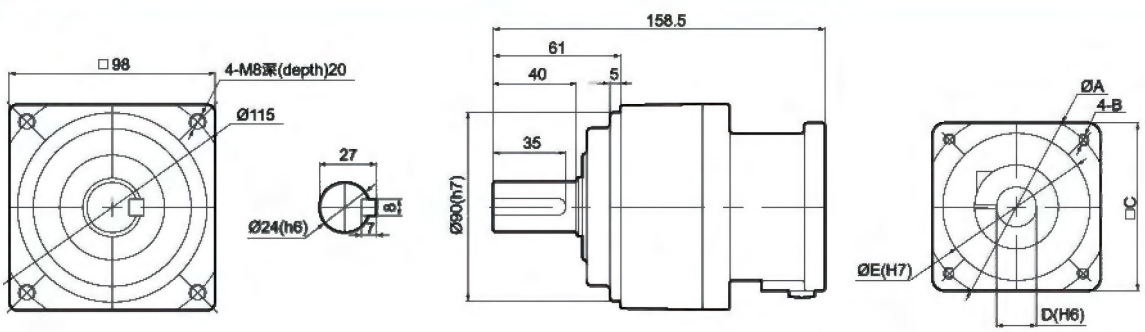


●概略重量3.4kg
●Rough weight 3.4kg
●TYPE1~3的详细情况请参照P.44
●For details of TYPE1~3, see 44 page.

■法兰部位详细尺寸表Detailed flange dimensions table (单位Unit: mm)

| 马达种类Motor type | A | B | C | D | E |
|---|---|---|---|---|---|
| TYPE 1 | 90 | M5 | 80 | 19 | 70 |
| TYPE 2 | 90 | M6 | 80 | 16 | 70 |
| TYPE 3 | 90 | M6 | 80 | 19 | 70 |

# 750W 尺寸图与性能表
# 750W DIMENSIONAL DRAWING & PERFORMANCE TABLE

## ■ 尺寸图 Dimensional Drawing

### VRSF-15D·20D·25D-750

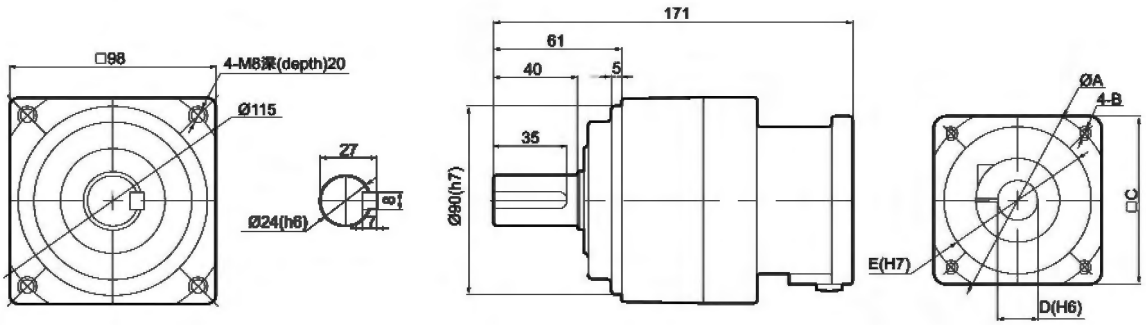


- ●概略重量3.8kg
- ●Rough weight 3.8kg
- ●TYPE1～3的详细情况请参照P.44
- ●For details of TYPE1～3, see 44 page.

■法兰部位详细尺寸表Detailed flange dimensions table（单位Unit: mm）

| 马达种类Motor type | A | B | C | D | E |
|---|---|---|---|---|---|
| TYPE 1 | 90 | M5 | 80 | 19 | 70 |
| TYPE 2 | 90 | M6 | 80 | 16 | 70 |
| TYPE 3 | 90 | M6 | 80 | 19 | 70 |

### VRSF-35E-750

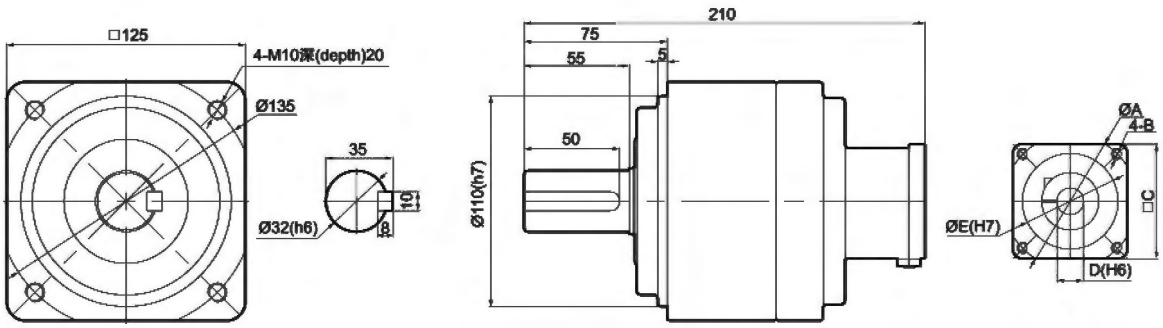


- ●概略重量7.2kg
- ●Rough weight 7.2kg
- ●TYPE1～3的详细情况请参照P.44
- ●For details of TYPE1～3, see 44 page.

■法兰部位详细尺寸表Detailed flange dimensions table（单位Unit: mm）

| 马达种类Motor type | A | B | C | D | E |
|---|---|---|---|---|---|
| TYPE 1 | 90 | M5 | 80 | 19 | 70 |
| TYPE 2 | 90 | M6 | 80 | 16 | 70 |
| TYPE 3 | 90 | M6 | 80 | 19 | 70 |

### VRSF-45E-750

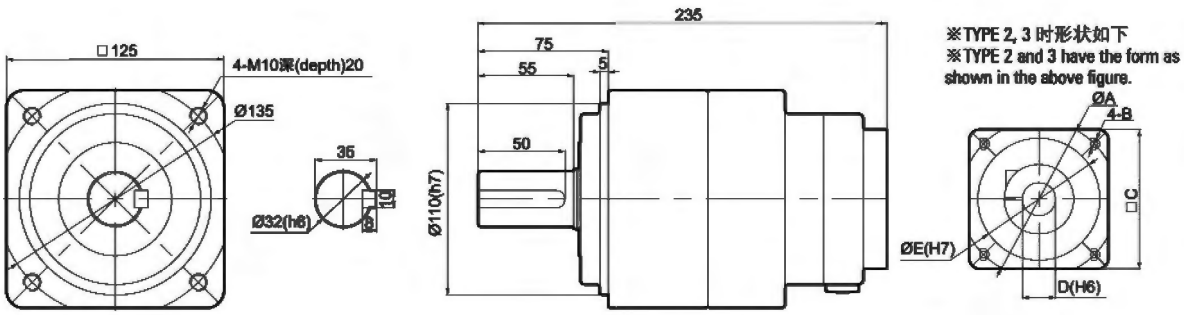


- ●概略重量12.0kg
- ●Rough weight 12.0kg
- ●TYPE1～3的详细情况请参照P.44
- ●For details of TYPE1～3, see 44 page.

■法兰部位详细尺寸表Detailed flange dimensions table（单位Unit: mm）

| 马达种类Motor type | A | B | C | D | E |
|---|---|---|---|---|---|
| TYPE 1 | 90 | M5 | 80 | 19 | 70 |
| TYPE 2 | 90 | M6 | 80 | 16 | 70 |
| TYPE 3 | 90 | M6 | 80 | 19 | 70 |

# 1000W 尺寸图与性能表
# 1000W DIMENSIONAL DRAWING & PERFORMANCE TABLE

## ■ 性能表 Performance Table (输入转速为3,000rpm时 When input speed is 3000rpm)

| 额定输入马达功率 Rated input motor | 减速比 Reduction ratio | 型号 Type | | | | 输出轴转速 Output shaft speed | 额定输出扭矩 Standard output torque | 瞬间最大输出扭矩 Instantaneous max. output torque | 容许径向负荷 Permissible radial load | 容许轴向负荷 Permissible axial load | 输入轴换算内部惯性力矩 Internal moment of inertia of input shaft conversion | 容许输出扭矩 Permissible output torque | 瞬间最大容许输出扭矩 Instantaneous max. permissible output torque |
|---|---|---|---|---|---|---|---|---|---|---|---|---|---|
| | | 机种 Model | 减速比 Reduction ratio | 尺位号 Type no. | 马达功率 Motor | (rpm) | (N·m) | (N·m) | (N) | (N) | ($10^{-4}$×kg·m²) | (N·m) | (N·m) |
| 1000W | 1/3 | VRSF | 3 | D | 1000 | 1000 | 7.55 | 22.8 | 882 | 441 | 2.43 | 18.3 | 54.9 |
| | 1/5 | VRSF | 5 | D | 1000 | 600 | 13.4 | 40.5 | 1080 | 539 | 1.85 | 23.5 | 70.6 |
| | 1/9 | VRSF | 9 | E | 1000 | 333 | 20.2 | 60.1 | 1960 | 980 | 2.81 | 73.5 | 221 |
| | 1/15 | VRSF | 15 | E | 1000 | 200 | 33.3 | 100 | 2350 | 1180 | 1.95 | 91.4 | 274 |
| | 1/25 | VRSF | 25 | E | 1000 | 120 | 55.7 | 167 | 2650 | 1320 | 1.88 | 65.4 | 196 |

注1) 安装基准机种（马达适用表记载系列）以外的马达时，每次都要与我们联系。（法兰尺寸可能不同）
注2) 输入轴换算惯性力矩仅为减速机的数值，不包括马达的惯性力矩。
注3) 最高输入转速为5000rpm。正常情况下请转速控制在3000rpm以下。
注4) 容许径向负荷表示输出轴中央部位的值。
注5) 全部为斜齿轮适用范围。
注6) 马达的安装顺序请参照P.46
注7) 输出轴旋转方向与马达输入旋转方向相同。

Note 1) In case of attachment to a motor beyond the standard models(motor matching series), contact us.(How to measure dimensions of the flange may be changed in some cases.)
Note 2) The moment of inertia of input shaft conversion is only gained from the reducer, so it does not include moment of inertia of the motor.
Note 3) The max. input speed is 5000rpm, and usually set to 3000rpm or less.
Note 4) The permissible radial load is indicated on the center of the output shaft.
Note 5) All values are within the range corresponding to helical gear.
Note 6) For motor assembly procedure, see 46 page.
Note 7) Rotation of the output shaft is in the same direction as motor.

## ■ 尺寸图 Dimensional Drawing

### VRSF-3D·5D-1000

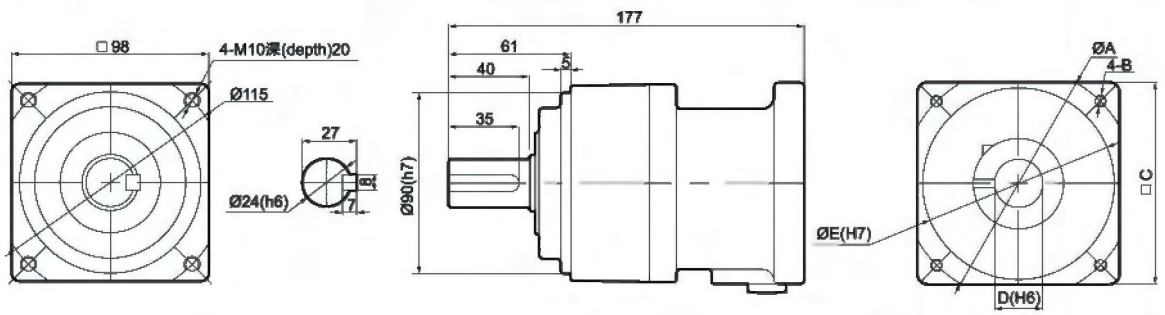


●概略重量3.9kg
●Rough weight 3.9kg
●TYPE1~3的详细情况请参照P.45
●For details of TYPE1~3, see 45 page.

■法兰部位详细尺寸表Detailed flange dimensions table (单位Unit: mm)

| 马达种类Motor type | A | B | C | D | E |
|---|---|---|---|---|---|
| TYPE 1 | 100 | M6 | 90 | 19 | 80 |
| TYPE 2 | 115 | M6 | 100 | 24 | 95 |
| TYPE 3 | 115 | M8 | 100 | 24 | 95 |

# 1000W 尺寸图与性能表
# 1000W DIMENSIONAL DRAWING & PERFORMANCE TABLE

## ■ 尺寸图 Dimensional Drawing

### VRSF-9E-1000

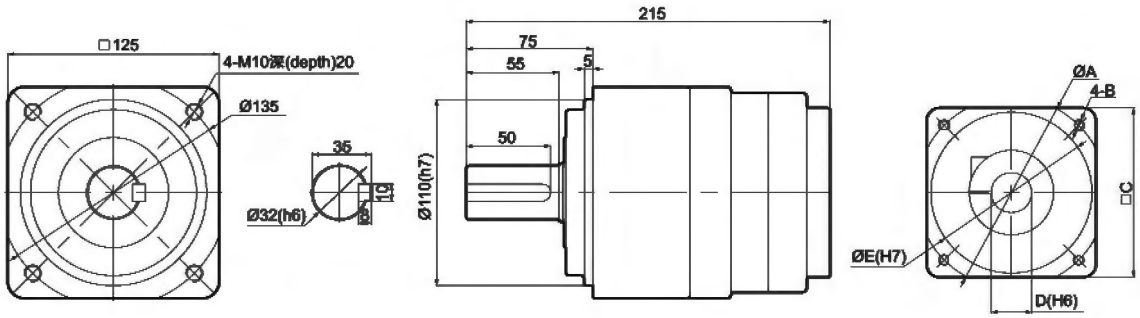


●概略重量11.0kg
●Rough weight 11.0kg
●TYPE1～3的详细情况请参照P.45
●For details of TYPE1～3, see 45 page.

■法兰部位详细尺寸表Detailed flange dimensions table（单位Unit: mm）

| 马达种类Motor type | A | B | C | D | E |
|---|---|---|---|---|---|
| TYPE 1 | 100 | M6 | 90 | 19 | 80 |
| TYPE 2 | 115 | M6 | 100 | 24 | 95 |
| TYPE 3 | 115 | M8 | 100 | 24 | 95 |

## ■ 尺寸图 Dimensional Drawing

### VRSF-15E·25E-1000

※TYPE 2, 3 时形状如下
※TYPE 2 and 3 have the form as shown in the above figure.

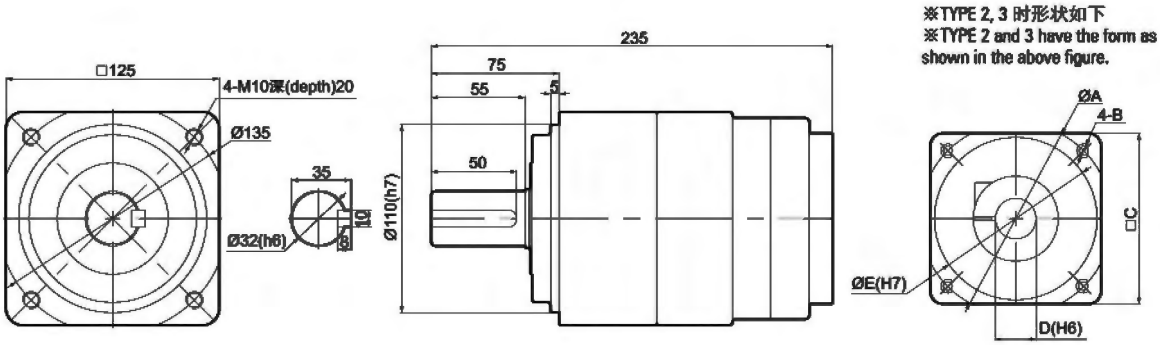


●概略重量12.0kg
●Rough weight 12.0kg
●TYPE1～3的详细情况请参照P.45
●For details of TYPE1～3, see 45 page.

■法兰部位详细尺寸表Detailed flange dimensions table（单位Unit: mm）

| 马达种类Motor type | A | B | C | D | E |
|---|---|---|---|---|---|
| TYPE 1 | 100 | M6 | 90 | 19 | 80 |
| TYPE 2 | 115 | M6 | 100 | 24 | 95 |
| TYPE 3 | 115 | M8 | 100 | 24 | 95 |

# 1500W 尺寸图与性能表
# 1500W DIMENSIONAL DRAWING & PERFORMANCE TABLE

YKA TRANSMISSION MACHINE 宜昌·全球动力专家

## ■ 性能表 Performance Table (输入转速为3,000rpm时 When input speed is 3000rpm)

| 额定输入马达功率 Rated input motor | 减速比 Reduction ratio | 型号 Type | | | | 输出轴转速 Output shaft speed | 额定输出扭矩 Standard output torque | 瞬间最大输出扭矩 Instantaneous max. output torque | 容许径向负荷 Permissible radial load | 容许轴向负荷 Permissible axial load | 输入轴换算内部惯性力矩 Internal moment of inertia of input shaft conversion | 容许输出扭矩 Permissible output torque | 瞬间最大容许输出扭矩 Instantaneous max. permissible output torque |
|---|---|---|---|---|---|---|---|---|---|---|---|---|---|
| | | 机种 Model | 减速比 Reduction ratio | 段位号 Type no. | 马达功率 Motor | (rpm) | (N·m) | (N·m) | (N) | (N) | ($10^{-4}$×kg·m²) | (N·m) | (N·m) |
| 1500W | 1/3 | VRSF | 3 | D | 1500 | 1000 | 12.3 | 37.1 | 882 | 441 | 2.43 | 18.3 | 54.9 |
| | 1/5 | VRSF | 5 | D | 1500 | 600 | 21.5 | 64.4 | 1080 | 539 | 1.85 | 23.5 | 70.6 |
| | 1/9 | VRSF | 9 | E | 1500 | 333 | 34.3 | 103 | 1960 | 980 | 2.81 | 73.5 | 221 |
| | 1/15 | VRSF | 15 | E | 1500 | 200 | 57.2 | 172 | 2350 | 1180 | 2.80 | 91.4 | 274 |

注1) 安装基准机种（马达适用表记载系列）以外的马达时，每次都要与我们联系。（法兰尺寸可能不同）
注2) 输入轴换算惯性力矩仅为减速机的数值，不包括马达的惯性力矩。
注3) 最高输入转速为5000rpm。正常情况下请转速控制在3000rpm以下。
注4) 容许径向负荷表示输出轴中央部位的值。
注5) 全部为斜齿轮适用范围。
注6) 马达的安装顺序请参照P.46
注7) 输出轴旋转方向与马达输入旋转方向相同。

Note 1) In case of attachment to a motor beyond the standard models(motor matching series), contact us.(How to measure dimensions of the flange may be changed in some cases.)
Note 2) The moment of inertia of input shaft conversion is only gained from the reducer, so it does not include moment of inertia of the motor.
Note 3) The max. input speed is 5000rpm, and usually set to 3000rpm or less.
Note 4) The permissible radial load is indicated on the center of the output shaft.
Note 5) All values are within the range corresponding to helical gear.
Note 6) For motor assembly procedure, see 46 page.
Note 7) Rotation of the output shaft is in the same direction as motor.

## ■ 尺寸图 Dimensional Drawing

### VRSF-3D-5D-1500

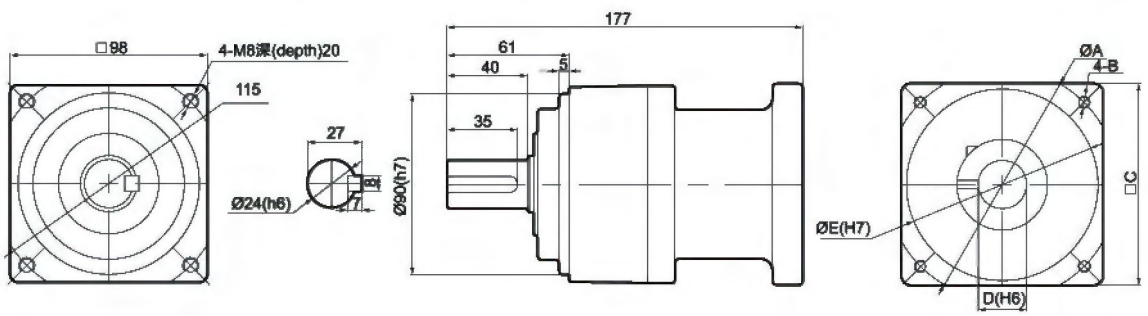


●概略重量3.9kg
●Rough weight 3.9kg
●TYPE1～3的详细情况请参照P.45
●For details of TYPE1～3, see 45 page.

■法兰部位详细尺寸表Detailed flange dimensions table（单位Unit: mm）

| 马达种类Motor type | A | B | C | D | E |
|---|---|---|---|---|---|
| TYPE 1 | 115 | M8 | 100 | 19 | 95 |
| TYPE 2 | 115 | M6 | 100 | 24 | 95 |
| TYPE 3 | 115 | M8 | 100 | 24 | 95 |

## VRSF-9E-1500

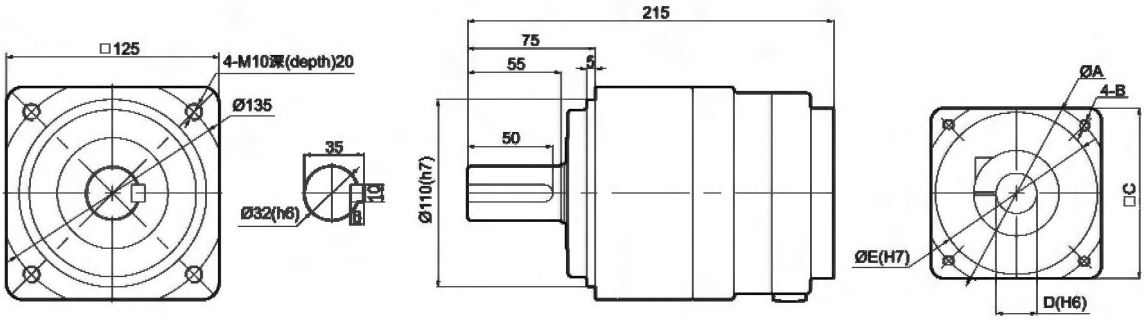


- 概略重量11.5kg
- Rough weight 11.5kg
- TYPE1～3的详细情况请参照P.45
- For details of TYPE1～3, see 45 page.

■法兰部位详细尺寸表Detailed flange dimensions table（单位Unit: mm）

| 马达种类Motor type | A | B | C | D | E |
|---|---|---|---|---|---|
| TYPE 1 | 115 | M8 | 100 | 19 | 95 |
| TYPE 2 | 115 | M6 | 100 | 24 | 95 |
| TYPE 3 | 115 | M8 | 100 | 24 | 95 |

## ■ 尺寸圖 Dimensional Drawing

## VRSF-15E-1500

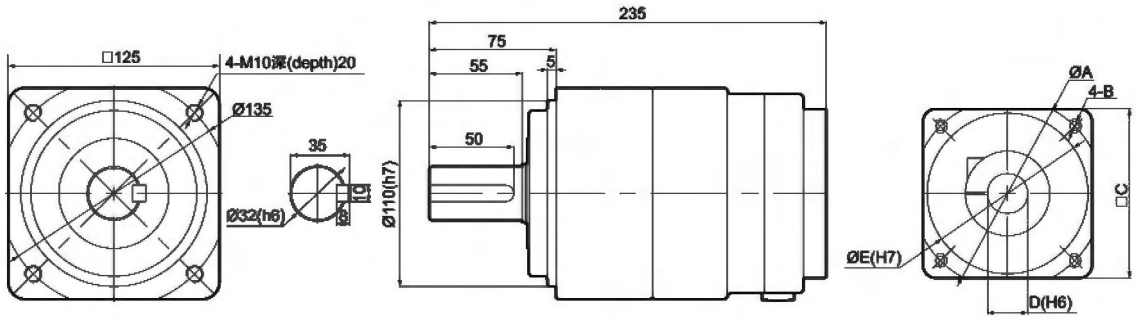


- 概略重量12.5kg
- Rough weight 12.5kg
- TYPE1～3的详细情况请参照P.45
- For details of TYPE1～3, see 45 page.

■法兰部位详细尺寸表Detailed flange dimensions table（单位Unit: mm）

| 马达种类Motor type | A | B | C | D | E |
|---|---|---|---|---|---|
| TYPE 1 | 115 | M8 | 100 | 19 | 95 |
| TYPE 2 | 115 | M6 | 100 | 24 | 95 |
| TYPE 3 | 115 | M8 | 100 | 24 | 95 |

# 2000W 尺寸图与性能表
# 2000W DIMENSIONAL DRAWING & PERFORMANCE TABLE

YKA TRANSMISSION MACHINE 宜昌·全球动力专家

## ■ 性能表 Performance Table (输入转速为3,000rpm时 When input speed is 3000rpm)

| 额定输入马达功率 Rated input motor | 减速比 Reduction ratio | 型号 Type | | | | 输出轴转速 Output shaft speed | 额定输出扭矩 Standard output torque | 瞬间最大输出扭矩 Instantaneous max. output torque | 容许径向负荷 Permissible radial load | 容许轴向负荷 Permissible axial load | 输入轴换算内部惯性力矩 Internal moment of inertia of input shaft conversion | 容许输出扭矩 Permissible output torque | 瞬间最大容许输出扭矩 Instantaneous max. permissible output torque |
|---|---|---|---|---|---|---|---|---|---|---|---|---|---|
| | | 机种 Model | 减速比 Reduction ratio | 服位号 Type no. | 马达功率 Motor | (rpm) | (N·m) | (N·m) | (N) | (N) | ($10^{-4}$×kg·m²) | (N·m) | (N·m) |
| 2000W | 1/3 | VRSF | 3 | D | 2000 | 1000 | 17.2 | 51.5 | 882 | 441 | 2.43 | 18.3 | 54.9 |
| | 1/5 | VRSF | 5 | E | 2000 | 600 | 23.8 | 71.5 | 1670 | 833 | 3.50 | 56.8 | 171 |
| | 1/9 | VRSF | 9 | E | 2000 | 333 | 48.6 | 146 | 1960 | 980 | 2.81 | 73.5 | 221 |
| | 1/15 | VRSF | 15 | E | 2000 | 200 | 81.0 | 243 | 2350 | 1180 | 2.80 | 91.4 | 274 |

注1) 安装基准机种（马达适用表记载系列）以外的马达时，每次都要与我们联系。（法兰尺寸可能不同）
注2) 输入轴换算惯性力矩仅为减速机的数值，不包括马达的惯性力矩。
注3) 最高输入转速为5000rpm。正常情况下请转速控制在3000rpm以下。
注4) 容许径向负荷表示输出轴中央部位的值。
注5) 全部为斜齿轮适用范围。
注6) 马达的安装顺序请参照P.46
注7) 输出轴旋转方向与马达输入旋转方向相同。

Note 1) In case of attachment to a motor beyond the standard models(motor matching series), contact us.(How to measure dimensions of the flange may be changed in some cases.)
Note 2) The moment of inertia of input shaft conversion is only gained from the reducer, so it does not include moment of inertia of the motor.
Note 3) The max. input speed is 5000rpm, and usually set to 3000rpm or less.
Note 4) The permissible radial load is indicated on the center of the output shaft.
Note 5) All values are within the range corresponding to helical gear.
Note 6) For motor assembly procedure, see 46 page.
Note 7) Rotation of the output shaft is in the same direction as motor.

## ■ 尺寸图 Dimensional Drawing

### VRSF-3D-2000

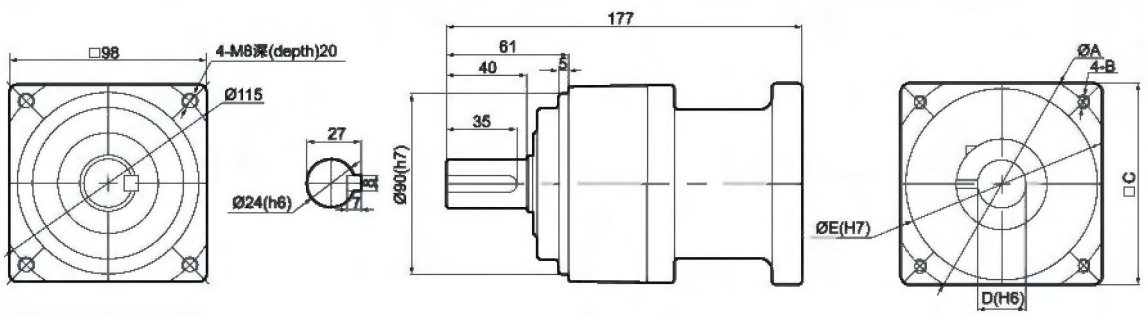


- 概略重量3.9kg
- Rough weight 3.9kg
- TYPE1～3的详细情况请参照P.45
- For details of TYPE1～3, see 45 page.

■法兰部位详细尺寸表Detailed flange dimensions table (单位Unit: mm)

| 马达种类Motor type | A | B | C | D | E |
|---|---|---|---|---|---|
| TYPE 1 | 115 | M8 | 100 | 19 | 95 |
| TYPE 2 | 115 | M6 | 100 | 24 | 95 |
| TYPE 3 | 115 | M8 | 100 | 24 | 95 |

# 2000W 尺寸图与性能表
# 2000W DIMENSIONAL DRAWING & PERFORMANCE TABLE

## VRSF-5E·9E-2000

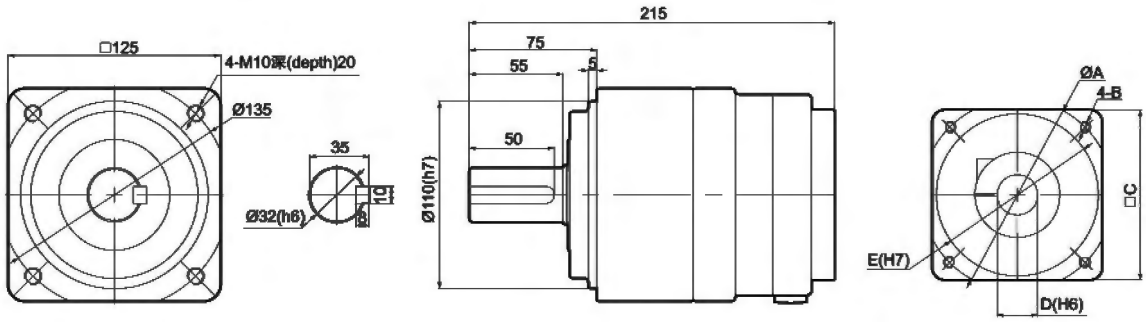


●概略重量11.5kg
●Rough weight 11.5kg
●TYPE1~3的详细情况请参照P.45
●For details of TYPE1~3, see 45 page.

■法兰部位详细尺寸表Detailed flange dimensions table（单位Unit: mm）

| 马达种类Motor type | A | B | C | D | E |
|---|---|---|---|---|---|
| TYPE 1 | 115 | M8 | 100 | 19 | 95 |
| TYPE 2 | 115 | M6 | 100 | 24 | 95 |
| TYPE 3 | 115 | M8 | 100 | 24 | 95 |

## ■ 尺寸图 Dimensional Drawing

## VRSF-15E-2000

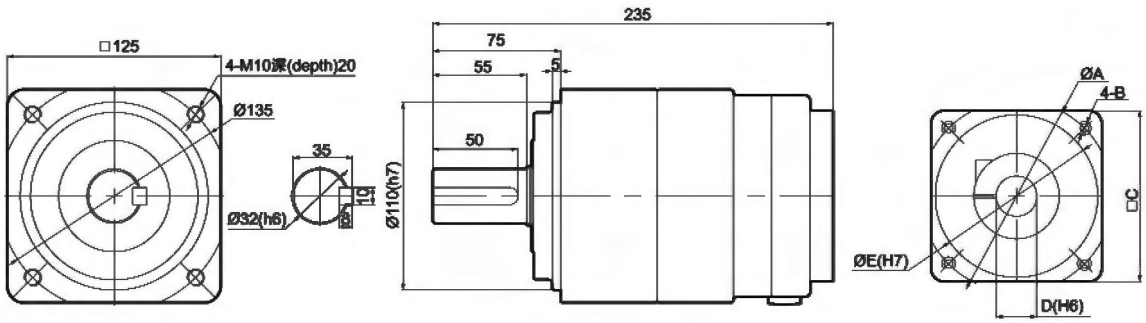


●概略重量12.5kg
●Rough weight 12.5kg
●TYPE1~3的详细情况请参照P.45
●For details of TYPE1~3, see 45 page.

■法兰部位详细尺寸表Detailed flange dimensions table（单位Unit: mm）

| 马达种类Motor type | A | B | C | D | E |
|---|---|---|---|---|---|
| TYPE 1 | 115 | M8 | 100 | 19 | 95 |
| TYPE 2 | 115 | M6 | 100 | 24 | 95 |
| TYPE 3 | 115 | M8 | 100 | 24 | 95 |

# 2500W 尺寸图与性能表
# 2500W DIMENSIONAL DRAWING & PERFORMANCE TABLE

YKA TRANSMISSION MACHINE 宜昌·全球动力专家

## ■ 性能表 Performance Table (输入转速为3,000rpm时 When input speed is 3000rpm)

| 额定输入马达功率 Rated input motor | 减速比 Reduction ratio | 型号 Type | | | | 输出轴转速 Output shaft speed | 额定输出扭矩 Standard output torque | 瞬间最大输出扭矩 Instantaneous max. output torque | 容许径向负荷 Permissible radial load | 容许轴向负荷 Permissible axial load | 输入轴换算内部惯性力矩 Internal moment of inertia of input shaft conversion | 容许输出扭矩 Permissible output torque | 瞬间最大容许输出扭矩 Instantaneous max. permissible output torque |
|---|---|---|---|---|---|---|---|---|---|---|---|---|---|
| | | 机种 Model | 减速比 Reduction ratio | 最位号 Type no. | 马达功率 Motor | (rpm) | (N·m) | (N·m) | (N) | (N) | ($10^{-4}$×kg·m²) | (N·m) | (N·m) |
| 2500W | 1/3 | VRSF | 3 | E | 2500 | 1000 | 19.0 | 57.2 | 1370 | 686 | 5.55 | 44.1 | 132 |
| | 1/5 | VRSF | 5 | E | 2500 | 600 | 31.8 | 95.5 | 1670 | 833 | 3.50 | 56.8 | 171 |
| | 1/9 | VRSF | 9 | E | 2500 | 333 | 60.8 | 182 | 1960 | 980 | 2.81 | 73.5 | 221 |

注1) 安装基准机种（马达适用表记载系列）以外的马达时，每次都要与我们联系。（法兰尺寸可能不同）
注2) 输入轴换算惯性力矩仅为减速机的数值，不包括马达的惯性力矩。
注3) 最高输入转速为5000rpm。正常情况下请转速控制在3000rpm以下。
注4) 容许径向负荷表示输出轴中央部位的值。
注5) 全部为斜齿轮适用范围。
注6) 马达的安装顺序请参照P.46
注7) 输出轴旋转方向与马达输入旋转方向相同。

Note 1) In case of attachment to a motor beyond the standard models(motor matching series), contact us.(How to measure dimensions of the flange may be changed in some cases.)
Note 2) The moment of inertia of input shaft conversion is only gained from the reducer, so it does not include moment of inertia of the motor.
Note 3) The max. input speed is 5000rpm, and usually set to 3000rpm or less.
Note 4) The permissible radial load is indicated on the center of the output shaft.
Note 5) All values are within the range corresponding to helical gear.
Note 6) For motor assembly procedure, see 46 page.
Note 7) Rotation of the output shaft is in the same direction as motor.

## ■ 尺寸图 Dimensional Drawing

### VRSF-3E·5E·9E-2500

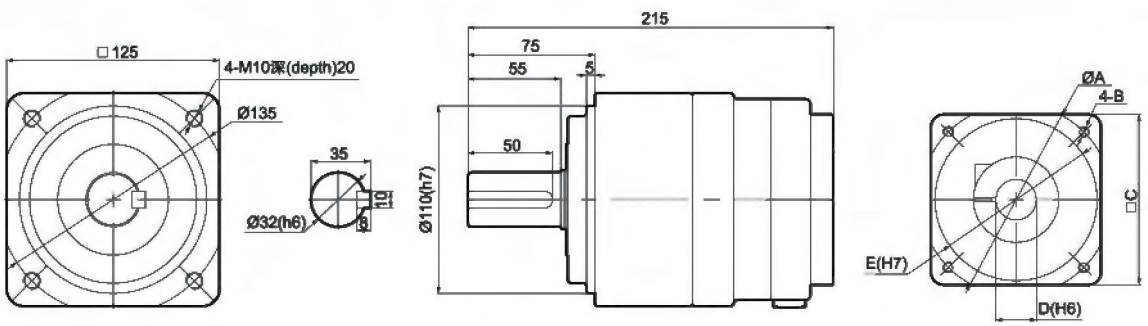


●概略重量11.5kg
●Rough weight 11.5kg
●TYPE1~2的详细情况请参照P.45
●For details of TYPE1~2, see 45 page.

■法兰部位详细尺寸表Detailed flange dimensions table (单位Unit: mm)

| 马达种类Motor type | A | B | C | D | E |
|---|---|---|---|---|---|
| TYPE 1 | 115 | M8 | 100 | 19 | 95 |
| TYPE 2 | 115 | M6 | 100 | 24 | 95 |
| TYPE 3 | - | - | - | - | - |

# 3000W 尺寸图与性能表
# 3000W DIMENSIONAL DRAWING & PERFORMANCE TABLE

## ■ 性能表 Performance Table (输入转速为3,000rpm时 When input speed is 3000rpm)

| 额定输入马达功率 Rated input motor | 减速比 Reduction ratio | 型号 Type | | | | 输出轴转速 Output shaft speed | 额定输出扭矩 Standard output torque | 瞬间最大输出扭矩 Instantaneous max. output torque | 容许径向负荷 Permissible radial load | 容许轴向负荷 Permissible axial load | 输入轴换算内部惯性力矩 Internal moment of inertia of input shaft conversion | 容许输出扭矩 Permissible output torque | 瞬间最大容许输出扭矩 Instantaneous max. permissible output torque |
|---|---|---|---|---|---|---|---|---|---|---|---|---|---|
| | | 机种 Model | 减速比 Reduction ratio | 段位号 Type no. | 马达功率 Motor | (rpm) | (N·m) | (N·m) | (N) | (N) | ($10^{-4}$×kg·m$^2$) | (N·m) | (N·m) |
| 3000W | 1/3 | VRSF | 3 | E | 3000 | 1000 | 23.7 | 71.2 | 1370 | 686 | 5.50 | 44.1 | 132 |
| | 1/5 | VRSF | 5 | E | 3000 | 600 | 39.6 | 119 | 1670 | 833 | 3.48 | 56.8 | 171 |
| | 1/9 | VRSF | 9 | E | 3000 | 333 | 73.0 | 219 | 1960 | 980 | 2.77 | 73.5 | 221 |

注1) 安装基准机种（马达适用表记载系列）以外的马达时，每次都要与我们联系。（法兰尺寸可能不同）
注2) 输入轴换算惯性力矩仅为减速机的数值，不包括马达的惯性力矩。
注3) 最高输入转速为5000rpm。正常情况下请转速控制在3000rpm以下。
注4) 容许径向负荷表示输出轴中央部位的值。
注5) 全部为斜齿轮适用范围。
注6) 马达的安装顺序请参照P.46
注7) 输出轴旋转方向与马达输入旋转方向相同。

Note 1) In case of attachment to a motor beyond the standard models(motor matching series), contact us.(How to measure dimensions of the flange may be changed in some cases.)
Note 2) The moment of inertia of input shaft conversion is only gained from the reducer, so it does not include moment of inertia of the motor.
Note 3) The max. input speed is 5000rpm, and usually set to 3000rpm or less.
Note 4) The permissible radial load is indicated on the center of the output shaft.
Note 5) All values are within the range corresponding to helical gear.
Note 6) For motor assembly procedure, see 46 page.
Note 7) Rotation of the output shaft is in the same direction as motor.

## ■ 尺寸图 Dimensional Drawing

### VRSF-3E·5E·9E-3000

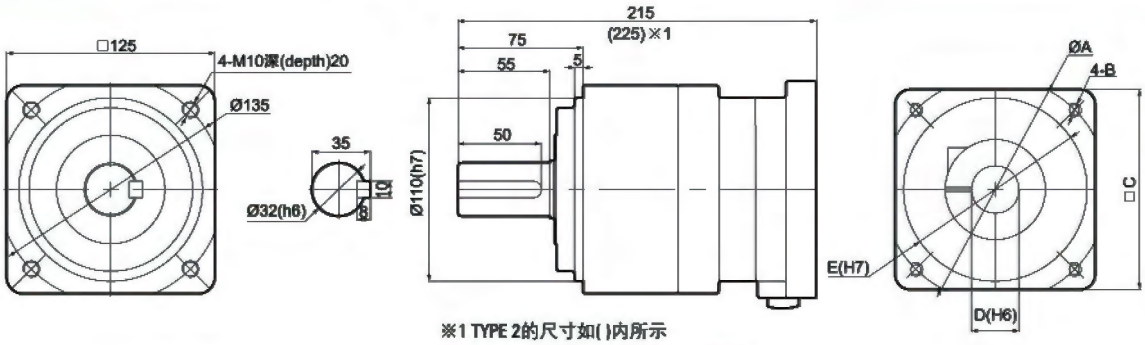


※1 TYPE 2的尺寸如( )内所示
※1 TYPE2 has the numericalvalue indicated in ( ).

●概略重量12.0kg
●Rough weight 12.0kg
●TYPE1～2的详细情况请参照P.45
●For details of TYPE1～2, see 45 page.

■法兰部位详细尺寸表Detailed flange dimensions table (单位Unit: mm)

| 马达种类Motor type | A | B | C | D | E |
|---|---|---|---|---|---|
| TYPE 1 | 130 | M8 | 120 | 22 | 110 |
| TYPE 2 | 145 | M8 | 130 | 28 | 110 |
| TYPE 3 | - | - | - | - | - |

# 3500W 尺寸图与性能表
# 3500W DIMENSIONAL DRAWING & PERFORMANCE TABLE

## ■ 性能表 Performance Table (输入转速为3,000rpm时 When input speed is 3000rpm)

| 额定输入马达功率 Rated input motor | 减速比 Reduction ratio | 型号 Type | | | | 输出轴转速 Output shaft speed | 额定输出扭矩 Standard output torque | 瞬间最大输出扭矩 Instantaneous max. output torque | 容许径向负荷 Permissible radial load | 容许轴向负荷 Permissible axial load | 输入轴换算内部惯性力矩 Internal moment of inertia of input shaft conversion | 容许输出扭矩 Permissible output torque | 瞬间最大容许输出扭矩 Instantaneous max. permissible output torque |
|---|---|---|---|---|---|---|---|---|---|---|---|---|---|
| | | 机种 Model | 减速比 Reduction ratio | 最位号 Type no. | 马达功率 Motor | (rpm) | (N·m) | (N·m) | (N) | (N) | ($10^{-4}$×kg·m²) | (N·m) | (N·m) |
| 3500W | 1/3 | VRSF | 3 | E | 3500 | 1000 | 28.3 | 85.2 | 1370 | 686 | 5.50 | 44.1 | 132 |
| | 1/5 | VRSF | 5 | E | 3500 | 600 | 47.2 | 141 | 1670 | 833 | 3.48 | 56.8 | 171 |

注1) 安装基准机种（马达适用表记载系列）以外的马达时，每次都要与我们联系。（法兰尺寸可能不同）
注2) 输入轴换算惯性力矩仅为减速机的数值，不包括马达的惯性力矩。
注3) 最高输入转速为5000rpm。正常情况下请转速控制在3000rpm以下。
注4) 容许径向负荷表示输出轴中央部位的值。
注5) 全部为斜齿轮适用范围。
注6) 马达的安装顺序请参照P.46
注7) 输出轴旋转方向与马达输入旋转方向相同。

Note 1) In case of attachment to a motor beyond the standard models(motor matching series), contact us.(How to measure dimensions of the flange may be changed in some cases.)
Note 2) The moment of inertia of input shaft conversion is only gained from the reducer, so it does not include moment of inertia of the motor.
Note 3) The max. input speed is 5000rpm, and usually set to 3000rpm or less.
Note 4) The permissible radial load is indicated on the center of the output shaft.
Note 5) All values are within the range corresponding to helical gear.
Note 6) For motor assembly procedure, see 46 page.
Note 7) Rotation of the output shaft is in the same direction as motor.

## ■ 尺寸图 Dimensional Drawing

### VRSF-3E-5E-3500

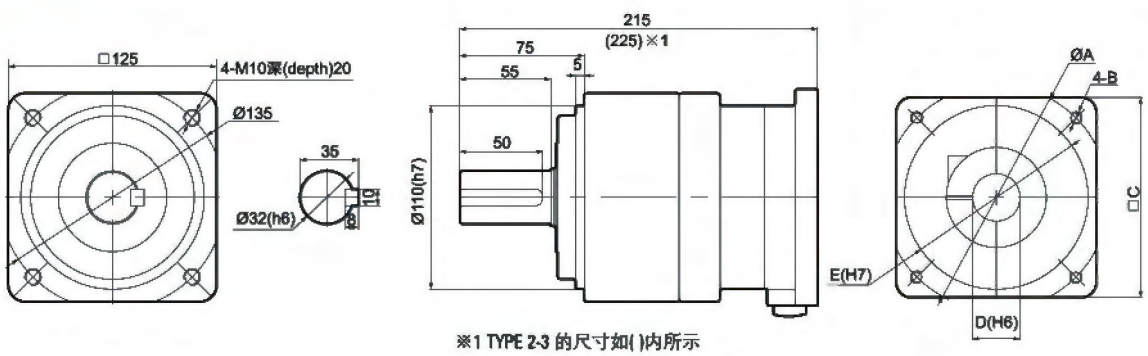


※1 TYPE 2-3 的尺寸如( )内所示
※1 TYPE 2-3 has the numericalvalue indicated in ( ).

- 概略重量12.0kg
- Rough weight 12.0kg
- TYPE1~3的详细情况请参照P.45
- For details of TYPE1~3, see 45 page.

■法兰部位详细尺寸表Detailed flange dimensions table (单位Unit: mm)

| 马达种类Motor type | A | B | C | D | E |
|---|---|---|---|---|---|
| TYPE 1 | 130 | M8 | 120 | 22 | 110 |
| TYPE 2 | - | - | - | - | - |
| TYPE 3 | 145 | M8 | 130 | 28 | 110 |

# 4000W 尺寸图与性能表
# 4000W DIMENSIONAL DRAWING & PERFORMANCE TABLE

## ■ 性能表 Performance Table (输入转速为3,000rpm时 When input speed is 3000rpm)

| 额定输入马达功率 Rated input motor | 减速比 Reduction ratio | 型号 Type | | | | 输出轴转速 Output shaft speed | 额定输出扭矩 Standard output torque | 瞬间最大输出扭矩 Instantaneous max. output torque | 容许径向负荷 Permissible radial load | 容许轴向负荷 Permissible axial load | 输入轴换算内部惯性力矩 Internal moment of inertia of input shaft conversion | 容许输出扭矩 Permissible output torque | 瞬间最大容许输出扭矩 Instantaneous max. permissible output torque |
|---|---|---|---|---|---|---|---|---|---|---|---|---|---|
| | | 机种 Model | 减速比 Reduction ratio | 段位号 Type no. | 马达功率 Motor | (rpm) | (N·m) | (N·m) | (N) | (N) | ($10^{-4}$×kg·m$^2$) | (N·m) | (N·m) |
| 4000W | 1/3 | VRSF | 3 | E | 4000 | 1000 | 33.1 | 99.0 | 1370 | 686 | 5.78 | 44.1 | 132 |
| | 1/5 | VRSF | 5 | E | 4000 | 600 | 55.3 | 166 | 1670 | 833 | 3.75 | 56.8 | 171 |

注1) 安装基准机种（马达适用表记载系列）以外的马达时，每次都要与我们联系。（法兰尺寸可能不同）
注2) 输入轴换算惯性力矩仅为减速机的数值，不包括马达的惯性力矩。
注3) 最高输入转速为5000rpm。正常情况下请转速控制在3000rpm以下。
注4) 容许径向负荷表示输出轴中央部位的值。
注5) 全部为斜齿轮适用范围。
注6) 马达的安装顺序请参照P.46
注7) 输出轴旋转方向与马达输入旋转方向相同。

Note 1) In case of attachment to a motor beyond the standard models(motor matching series), contact us.(How to measure dimensions of the flange may be changed in some cases.)
Note 2) The moment of inertia of input shaft conversion is only gained from the reducer, so it does not include moment of inertia of the motor.
Note 3) The max. input speed is 5000rpm, and usually set to 3000rpm or less.
Note 4) The permissible radial load is indicated on the center of the output shaft.
Note 5) All values are within the range corresponding to helical gear.
Note 6) For motor assembly procedure, see 46 page.
Note 7) Rotation of the output shaft is in the same direction as motor.

## ■ 尺寸图 Dimensional Drawing

### VRSF-3E·5E-4000

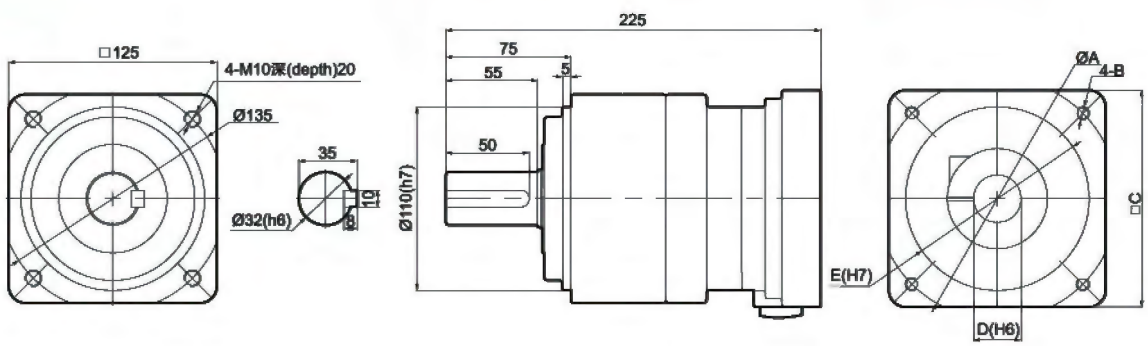


●概略重量13.0kg
●Rough weight 13.0kg
●TYPE1~2的详细情况请参照P.45
●For details of TYPE1~2, see 45 page.

■法兰部位详细尺寸表Detailed flange dimensions table（单位Unit: mm）

| 马达种类Motor type | A | B | C | D | E |
|---|---|---|---|---|---|
| TYPE 1 | 145 | M8 | 130 | 24 | 110 |
| TYPE 2 | 145 | M8 | 130 | 28 | 110 |
| TYPE 3 | - | - | - | - | - |

# 4500W 尺寸图与性能表
# 4500W DIMENSIONAL DRAWING & PERFORMANCE TABLE

## ■ 性能表 Performance Table (输入转速为3,000rpm时 When input speed is 3000rpm)

| 额定输入马达功率 Rated input motor | 减速比 Reduction ratio | 型号 Type | | | | 输出轴转速 Output shaft speed | 额定输出扭矩 Standard output torque | 瞬间最大输出扭矩 Instantaneous max. output torque | 容许径向负荷 Permissible radial load | 容许轴向负荷 Permissible axial load | 输入轴换算内部惯性力矩 Internal moment of inertia of input shaft conversion | 容许输出扭矩 Permissible output torque | 瞬间最大容许输出扭矩 Instantaneous max. permissible output torque |
|---|---|---|---|---|---|---|---|---|---|---|---|---|---|
| | | 机种 Model | 减速比 Reduction ratio | 型位号 Type no. | 马达功率 Motor | (rpm) | (N·m) | (N·m) | (N) | (N) | ($10^{-4}$×kg·m²) | (N·m) | (N·m) |
| 4500W | 1/3 | VRSF | 3 | E | 4500 | 1000 | 37.7 | 113 | 1370 | 686 | 5.78 | 44.1 | 132 |

注1) 安装基准机种（马达适用表记载系列）以外的马达时，每次都要与我们联系。（法兰尺寸可能不同）
注2) 输入轴换算惯性力矩仅为减速机的数值，不包括马达的惯性力矩。
注3) 最高输入转速为5000rpm。正常情况下请转速控制在3000rpm以下。
注4) 容许径向负荷表示输出轴中央部位的值。
注5) 全部为斜齿轮适用范围。
注6) 马达的安装顺序请参照P.46
注7) 输出轴旋转方向与马达输入旋转方向相同。

Note 1) In case of attachment to a motor beyond the standard models(motor matching series), contact us.(How to measure dimensions of the flange may be changed in some cases.)
Note 2) The moment of inertia of input shaft conversion is only gained from the reducer, so it does not include moment of inertia of the motor.
Note 3) The max. input speed is 5000rpm, and usually set to 3000rpm or less.
Note 4) The permissible radial load is indicated on the center of the output shaft.
Note 5) All values are within the range corresponding to helical gear.
Note 6) For motor assembly procedure, see 46 page.
Note 7) Rotation of the output shaft is in the same direction as motor.

## ■ 尺寸图 Dimensional Drawing

### VRSF-3E-4500

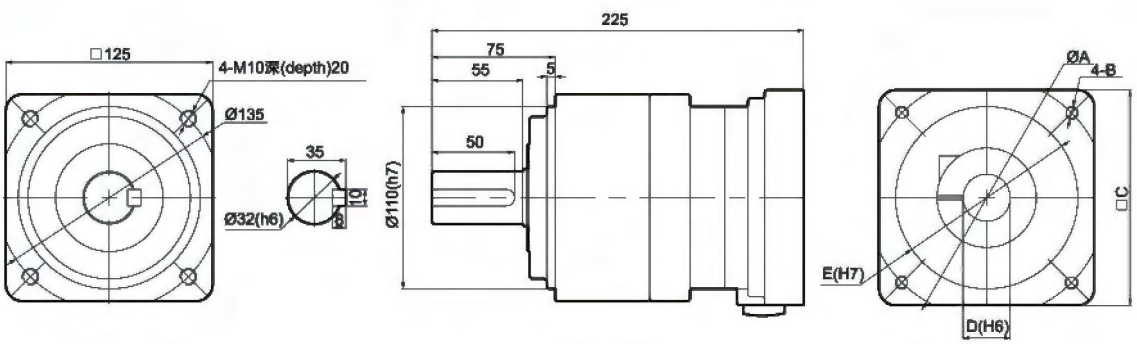


●概略重量13.0kg
●Rough weight 13.0kg
●TYPE1~3的详细情况请参照P.45
●For details of TYPE1~3, see 45 page.

■法兰部位详细尺寸表Detailed flange dimensions table (单位Unit: mm)

| 马达种类Motor type | A | B | C | D | E |
|---|---|---|---|---|---|
| TYPE 1 | 145 | M8 | 130 | 24 | 110 |
| TYPE 2 | - | - | - | - | - |
| TYPE 3 | - | - | - | - | - |

# 5000W 尺寸图与性能表
# 5000W DIMENSIONAL DRAWING & PERFORMANCE TABLE

## ■ 性能表 Performance Table (输入转速为3,000rpm时 When input speed is 3000rpm)

| 额定输入马达功率 Rated input motor | 减速比 Reduction ratio | 型号 Type | | | | 输出轴转速 Output shaft speed | 额定输出扭矩 Standard output torque | 瞬间最大输出扭矩 Instantaneous max. output torque | 容许径向负荷 Permissible radial load | 容许轴向负荷 Permissible axial load | 输入轴换算内部惯性力矩 Internal moment of inertia of input shaft conversion | 容许输出扭矩 Permissible output torque | 瞬间最大容许输出扭矩 Instantaneous max. permissible output torque |
|---|---|---|---|---|---|---|---|---|---|---|---|---|---|
| | | 机种 Model | 减速比 Reduction ratio | 段位号 Type no. | 马达功率 Motor | (rpm) | (N·m) | (N·m) | (N) | (N) | ($10^{-4}$×kg·m$^2$) | (N·m) | (N·m) |
| 5000W | 1/3 | VRSF | 3 | E | 5000 | 1000 | 42.9 | 128 | 1370 | 686 | 5.78 | 44.1 | 132 |

注1) 安装基准机种（马达适用表记载系列）以外的马达时，每次都要与我们联系。（法兰尺寸可能不同）
注2) 输入轴换算惯性力矩仅为减速机的数值，不包括马达的惯性力矩。
注3) 最高输入转速为5000rpm。正常情况下请转速控制在3000rpm以下。
注4) 容许径向负荷表示输出轴中央部位的值。
注5) 全部为斜齿轮适用范围。
注6) 马达的安装顺序请参照P.46
注7) 输出轴旋转方向与马达输入旋转方向相同。

Note 1) In case of attachment to a motor beyond the standard models(motor matching series), contact us.(How to measure dimensions of the flange may be changed in some cases.)
Note 2) The moment of inertia of input shaft conversion is only gained from the reducer, so it does not include moment of inertia of the motor.
Note 3) The max. input speed is 5000rpm, and usually set to 3000rpm or less.
Note 4) The permissible radial load is indicated on the center of the output shaft.
Note 5) All values are within the range corresponding to helical gear.
Note 6) For motor assembly procedure, see 46 page.
Note 7) Rotation of the output shaft is in the same direction as motor.

## ■ 尺寸图 Dimensional Drawing

### VRSF-3E-5000

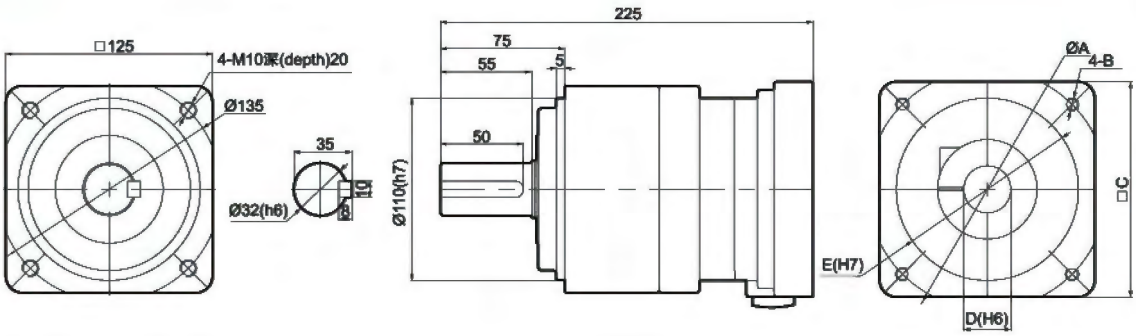


●概略重量13.0kg
●Rough weight 13.0kg
●TYPE1～3的详细情况请参照P.45
●For details of TYPE1～3, see 45 page.

■法兰部位详细尺寸表Detailed flange dimensions table（单位Unit: mm）

| 马达种类Motor type | A | B | C | D | E |
|---|---|---|---|---|---|
| TYPE 1 | 145 | M8 | 130 | 24 | 110 |
| TYPE 2 | 145 | M8 | 130 | 28 | 110 |
| TYPE 3 | 145 | M8 | 130 | 28 | 110 |

# 马达对应表(输入转速为3,000RPM时)
# MOTOR MATCHING TABLE (WHEN INPUT SPEED IS 3000RPM)

YKA TRANSMISSION MACHINE 宜昌·全球动力专家

■对应表 MATCHING TABLE

| 生产厂家 Motor manufacturer | 马达系列 Motor series | 马达功率 Motor power (W) | | | | |
|---|---|---|---|---|---|---|
| | | 50W | 100W | 200W | 400W | 750W |
| 松下电器产业(株) Panasonic | MSM | TYPE 1 | | | | |
| | MSMA | TYPE 1 | | | | |
| | MSMD | TYPE 1 | | | | |
| | MUMA | 基准外Out of standard | 基准外Out of standard | TYPE 1 | | |
| | MBMK | TYPE 1 | 基准外Out of standard | TYPE 1 | | |
| | MUMS | 基准外Out of standard | | | | |
| (株)安川电机 Yaskawa Electric | SGM | TYPE 2 | | | | |
| | SGMAH | TYPE 2 | | | | |
| | SGMAS | TYPE 2 | | | | |
| | SJME | 无对象No subject | TYPE 2 | | | |
| | SGMJV | TYPE 3 | | | | |
| | SGMAV | TYPE 3 | | | | |
| 三菱电机(株) Mitsubishi Wlectric | HC-KF | TYPE 3 | | | | |
| | HC-KFS | TYPE 3 | | | | |
| | HC-MF | TYPE 3 | | | | |
| | HC-MFS | TYPE 3 | | | | |
| | HA-ME | TYPE 3 | | | | |
| | HC-PQ | TYPE 3 | | | | 无对象No subject |
| | HC-KQ | TYPE 3 | | | | 无对象No subject |
| | HF-KP | TYPE 3 | | | | |
| | HF-MP | TYPE 3 | | | | |
| 欧姆龙(株) Omrom | R88M-U | TYPE 2 | | | | |
| | R88M-W | TYPE 2 | | | | |
| | R7M-A | TYPE 2 | | | | |
| | R7M-Z | TYPE 2 | | | | |
| 富士电机机器控制(株) Fuji Electric Systems | GYS※ | TYPE 2 | | | | |
| 山洋电气(株) Sanyo denki | P30B | TYPE 3 | | | | TYPE 2 |
| | Q1 | TYPE 3 | | | | 基准外Out of standard |
| (株)基恩斯Keyence | MV | TYPE 3 | | | | 基准外Out of standard |
| 东荣电机(株) Toshiba Machine | VLBSV-Z※ | 基准外Out of standard | | TYPE 3 | | |
| | VLBSV-ZA※ | 基准外Out of standard | | TYPE 3 | | |
| | VLBST | 基准外Out of standard | | TYPE 3 | | 基准外Out of standard |
| 多摩川精机(株) Tamagawa Seiki | TBL-i※ | TYPE 3 | | | | 无对象No subject |
| | TBL-i II ※ | TYPE 3 | | | | 基准外Out of standard |
| 日机电装(株) Nikki denso | NA50 | TYPE 1 | | | | |
| | NA70※ | TYPE 3 | | | | 无对象No subject |
| | NA80※ | TYPE 3 | | | | 基准外Out of standard |
| (株)三明Sanmei | TS※ | TYPE 3 | | | | 基准外Out of standard |
| | SS※ | TYPE 3 | | | | 基准外Out of standard |
| (株)日立产机系统 Hitachi Industrial Equipment Systems | ADMA | TYPE 3 | | | | 基准外Out of standard |
| 三木普利 Miki Pulley | SA3 | TYPE 1 | | | | |

注1) 没有油封和尺寸不同时，安装带油封的马达有时需特别订货。
注2) 马达轴为D形轴、锥形时需要特别订货。
注3) 因马达功率（适用表中带※的马达）与减速比的组合，出现瞬间最大输出扭矩时，产生的轴向力有时会超过伺服马达容许轴向力，因此，需要注意。（参照P.49轴向符合表。）
注4) 基准外有时需要特别订货。欲知详情，请另外与本公司联系。
Note 1) If an oil-seal is not present and the size is different, attachment of the oil-seal may correspond to specia order, in some cases.
Note 2) If the motor shaft is of D-cut and taper type, it corresponds to a special order.
Note 3) Note that thrust power arsing out of instantaneous max. ouyput torque bu the combination of motor capactith (motor of the motor series table) aend reduction ratio may exceed permissible thrust power of the servo motor. See the thrust load table on 49 page.).
Note 4) Out-of-standard may correspond to a special order in some cases. For details, contact us.

除上述伺服马达厂家外，本公司减速机还适配以下伺服马达厂家。安装方式请咨询本公司。
Our gearbox can metch to servo motor of followings manufacturers, including aboves. Please ask us about the assembly.

| 神钢电机(株) | 日本电产三协 | 中达电通 | 路斯特 | 博世力士乐 | 其它 etc. |
|---|---|---|---|---|---|

# 马达对应表(输入转速为3,000RPM时)
# MOTOR MATCHING TABLE (WHEN INPUT SPEED IS 3000RPM)

YKA TRANSMISSION MACHINE 宜昌·全球动力专家

## ■对应表 MATCHING TABLE

| 生产厂家 Motor manufacturer | 马达系列 Motor series | 马达功率 Motor power( W) | | | | | | | | |
|---|---|---|---|---|---|---|---|---|---|---|
| | | 1000W | 1500W | 2000W | 2500W | 3000W | 3500W | 4000W | 4500W | 5000W |
| 松下电器产业(株) Panasonic | MSM | TYPE 1 | | | | | | | | |
| | MSMA | TYPE 1 | | | | | | | | |
| (株)安川电机 Yaskawa Electric | SGMS | TYPE 2 | | | 无对象No subject | TYPE 2 | 无对象No subject | TYPE 2 | 无对象No subject | TYPE 2 |
| | SGMSH | TYPE 2 | | | 无对象No subject | TYPE 2 | 无对象No subject | TYPE 2 | 无对象No subject | TYPE 2 |
| | SGMSS | TYPE 2 | | | | | 无对象No subject | TYPE 2 | 无对象No subject | TYPE 2 |
| 三菱电机(株) Mitsubishi Wlectric | HC-RF | TYPE 3 | | | 无对象No subject | | TYPE 3 | 无对象No subject | | TYPE 3 |
| | HC-RFS | TYPE 3 | | | 无对象No subject | | TYPE 3 | 无对象No subject | | TYPE 3 |
| | HC-RP | TYPE3 | | | 无对象No subject | | TYPE 3 | 无对象No subject | | TYPE3 |
| 欧姆龙(株) Omrom | R88M-U | TYPE 2 | | | 无对象No subject | TYPE 2 | 无对象No subject | TYPE 2 | 无对象No subject | TYPE 2 |
| | R88M-W | TYPE 2 | | | 无对象No subject | TYPE 2 | 无对象No subject | TYPE 2 | 无对象No subject | TYPE 2 |
| 富士电机机器控制(株) Fuji Electric Systems | GYS | TYPE 3 | | | 无对象No subject | TYPE 2 | 无对象No subject | TYPE 2 | 无对象No subject | TYPE 2 |

## ■下列系列马达也可以标准方式适应 Standard compatibility with the follwing motor series

| 生产厂家 Motor manufacturer | 马达系列 Motor series | 马达功率 Motor power( W) |
|---|---|---|
| 三菱电机(株) Mitsubishi Wlectric | HC-SFS※ | 500W, 1000W, 1500W, 2000W, 3500W |
| | HF-SP | |
| (株)安川电机 Yaskawa Electric | SGMP | 100W, 200W, 400W, 750W, 1500W |
| | SGMPH | |
| | SGMPS | |
| 松下电器产业(株) Panasonic | MQMA | 100W, 200W, 400W |
| 欧姆龙(株) Omrom | R88M-WP | 100W, 200W, 400W, 750W, 1500W |
| | R7M-AP | 100W, 200W, 400W, 750W |
| 富士电机机器控制(株) Fuji Electric Systems | GYC | 100W, 200W, 400W |
| 发那科(株) Fanuc | ßiS※ | 200W, 400W, 500W, 750W, 1200W |

注1) 没有油封和尺寸不同时，安装带油封的马达有时需特别订货。
注2) 马达轴为D形轴、锥形时需要特别订货。
注3) 因马达功率（适用表中带※的马达）与减速比的组合，出现瞬间最大输出扭矩时，产生的轴向力有时会超过伺服马达容许轴向力，因此，需要注意。（参照P.49轴向符合表。）
注4) 基准外有时需要特别订货。欲知详情，请另外与本公司联系。
Note 1) If an oil-seal is not present and the size is different, attachment of the oil-seal may correspond to specia order, in some cases.
Note 2) If the motor shaft is of D-cut and taper type, it corresponds to a special order.
Note 3) Note that thrust power arsing out of instantaneous max. ouyput torque bu the combination of motor capactith (motor of the motor series table) aand reduction ratio may exceed permissible thrust power of the servo motor. See the thrust load table on 49 page.).
Note 4) Out-of-standard may correspond to a special order in some cases. For details, contact us.

除上述伺服马达厂家外，本公司减速机还适配以下伺服马达厂家。安装方式请咨询本公司。
Our gearbox can match to servo motor of followings manufacturers, including aboves. Please ask us about the assembly.

神钢电机(株) | 日本电产三协 | 中达电通 | 路斯特 | 博世力士乐 | 其它 etc.

## ■ 安装马达的步骤 Assembly procedure

客户自行安装伺服马达时，请按以下要领进行安装。伺服马达的尺寸多种多样，除指定的产品外，有些马达可能会无法连接法兰，因为，一定要使用您订货时指定的马达。

If a customer personally assembles the servo motor and reducer please use the following tip. The reducer flange to which the servo motor is attached has different dimensions based on the motor specified. Therefore, assembly may be impossible for some motor. Make sure the correct motor is specified before ordering the reducer.

### 1、安装无键马达 VRSF规格 VRSF spec. in case of assembling a motor without key

① 取下橡胶帽，转动输入轴，使螺栓头和橡胶帽的孔吻合。并请确认固定螺栓已松开。
② 将马达轴平稳地插入输出轴（请确保不受阻塞地顺畅的插入）。请充分注意不要让马达倾斜插入。
③将马达固定在减速机上，并按指定的扭矩将螺栓拧紧。参考表1
④ 使用扭矩扳手等工具，按指定的扭矩将输入轴的固定螺栓拧紧。参考表2
⑤ 盖上橡胶帽。安装到此结束。

① Take off the rubber cap, turn the input shaft, and match the head of the bolt to the hole of the rubber cap. Make sure that the set bolt is loosened.
② Gradually put the motor shaft into the input shaft (Ensure that it is smoothly put in without jam.) Be careful not to be inserted with the motor tilted.
③ Attach the motor to the reducer and fasten the bolt with designated fastening torque. See Table 1.
④ Fasten the set bolt of the input shaft with designated fastening torque using torque wrench, etc. See Table 2.
⑤ Puton a rubber cap. It is the end of assembling.

表1 Table1

| 马达固定螺栓Motor combination bolt | 拧紧扭矩Fastening torque | |
|---|---|---|
| | N·m | kgf·cm |
| M3 | 1.0 | 10 |
| M4 | 3.0 | 30 |
| M5 | 5.8 | 60 |
| M6 | 9.8 | 100 |
| M8 | 19.6 | 200 |
| M10 | 39.2 | 400 |
| M12 | 68.6 | 700 |
| M16 | 168 | 1650 |

表2 Table2

| 固定螺栓 Combination bolt | 拧紧扭矩Fastening torque | |
|---|---|---|
| | N·m | kgf·cm |
| M3 | 1.5 | 15 |
| M4 | 3.5 | 35 |
| M5 | 7.1 | 71 |
| M6 | 12 | 120 |
| M8 | 30 | 300 |

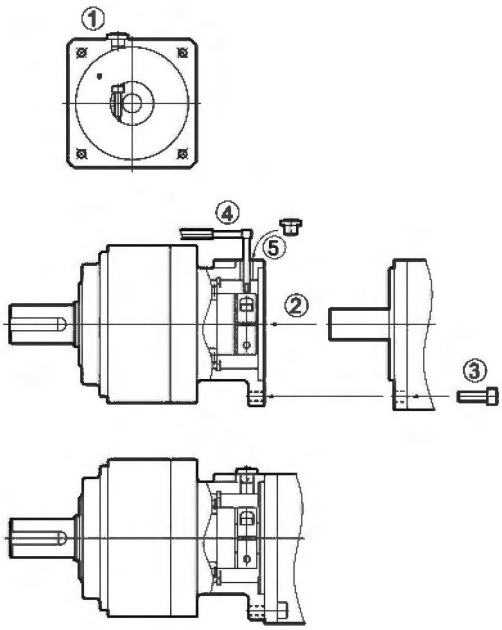


带键槽式马达的键取下后，可以像上述无键马达一样安装。无需担心会滑动。
You can assemble the motor with keyway like above when take off the key. There is no risk of dislocation.

## 2、安装带键槽马达 VRKF规格 VRKF spec. in case of assembling a motor with key

①取下橡胶帽，转动输入轴，使螺栓头和橡胶帽的孔吻合。
②在马达轴上涂上防烧结剂（二氧化钼等），并将键与键槽对上后平稳地插入输出轴（请确保不受阻塞地顺畅的插入）。请务必注意不要让马达倾斜插入。
③将马达安装在减速机上，并按指定的扭矩将螺栓拧紧。参考表1
④使用扭矩扳手等工具按指定的扭矩将输入轴的固定螺栓拧紧，并确认键已被压紧。参考表3
⑤盖上橡胶帽。安装到此结束。

①Take off the rubber cap, turn the input shaft, and match the head of the bolt to the hole of the rubber cap.
②Coat carbon formation inhibitors(molybdenum dioxide etc.) onto the motor shaft, match the key to the key slot, and gradually
③Combine the motor with the reducer and fasten with the designated fastening bolt. See Table 1.
④For set bolt of the input shaft, fasten using torque wrench with the designated fastening torque with the key firmly pressed. See Table 3.
⑤Puton a rubber cap. The is the end.

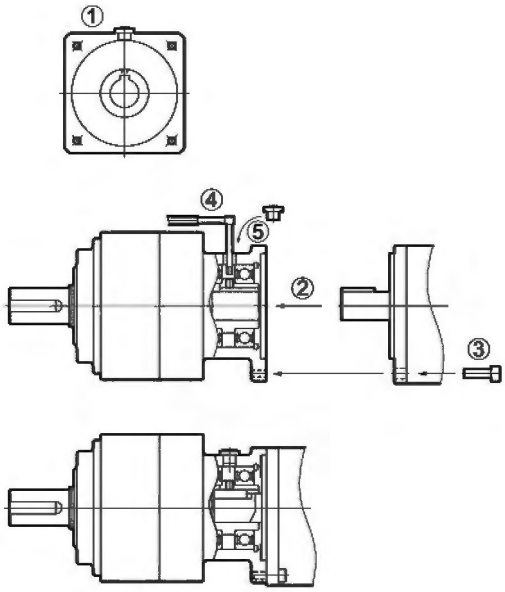


表3 Table3

| 固定螺栓 Combination bolt | 拧紧扭矩Fastening torque | |
|---|---|---|
| | N·m | kgf·cm |
| M4 | 2.0 | 20 |
| M5 | 4.3 | 43 |
| M6 | 7.3 | 73 |
| M8 | 16.8 | 168 |

## ■ 减速机的安装 Reducer assembly

将减速机安装在设备上时，请在确认安装面平坦且无毛刺等后，使用扭矩扳手等工具按指定的扭矩用螺栓将其固定。参考表4
Jointing with reducerIn case of jointing a reducer with the device, make sure that the combining side is plane without inconsistency, and when assemble reducer outo equipment, ensuring assembly surface smooth and without burr. See Table 4.

表4 Table4

| 减速机固定螺栓Reducercombination bolt | | 拧紧扭矩Fastening torque | |
|---|---|---|---|
| | | N·m | kgf·cm |
| B段Type | M5 | 5.8 | 60 |
| C段Type | M6 | 9.8 | 100 |
| D段Type | M8 | 19.6 | 200 |
| E段Type | M10 | 39.2 | 400 |

## ■ 连接输出轴 Connection to the output shaft

注意事项：
1、在输出轴上安装耦合器、滑轮等时，请勿在输出轴上施加过大的轴向负荷。
2、请勿使用强力将轴敲入，以免使轴承或减速机内部受到损伤。
3、安装的耦合器等的轴和键槽如有较大松动，可能会导致设备烧毁，安装时请充分注意。
4、安装耦合器等时，请使用固定螺栓来将键固定住。
5、连接时请充分调校轴心。

Cauti ons
1. When assemble a coupling, pulley, etc. onto the output shaft, make sure that excessive axial load not be given to the output shaft.
2. In case of strongly hitting the shaft with a hammer, the shaft inlet or the inside of the reducer may be damaged, therefore it shall be prohibited.
3. If the shaft or key of a coupling assembled is loosed, it may cause carbonization, so be careful when assembling.
4. For assembling of a coupling, fix the key with a set bolt.
5. Please adjust shaft centre carefully in connecting.

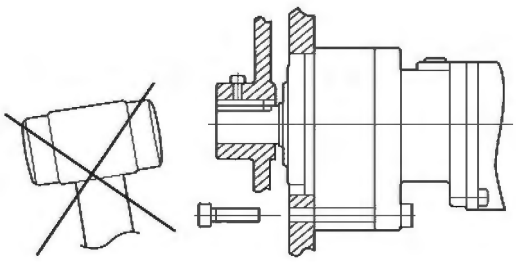

# 噪音填比较
# COMPARISON OF NOISE VALUES

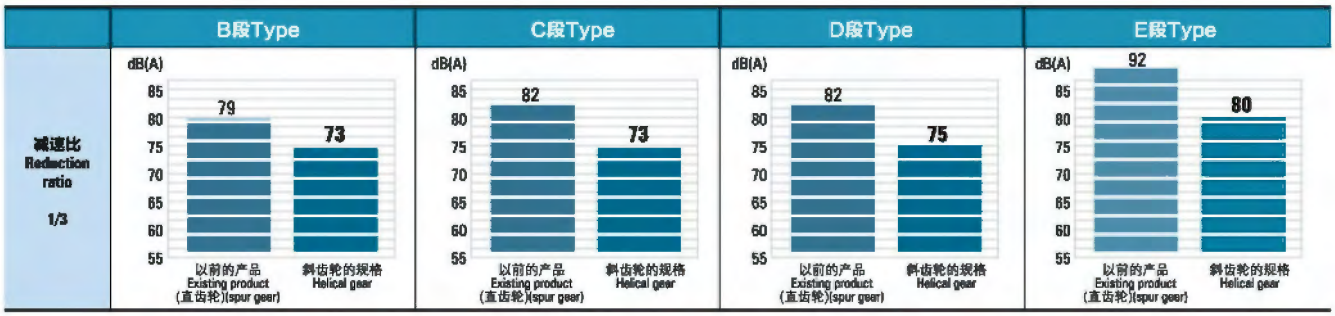


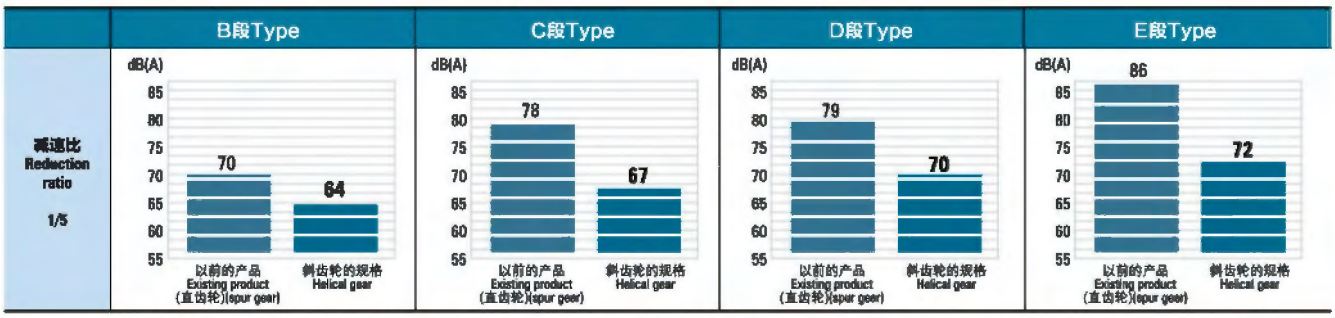


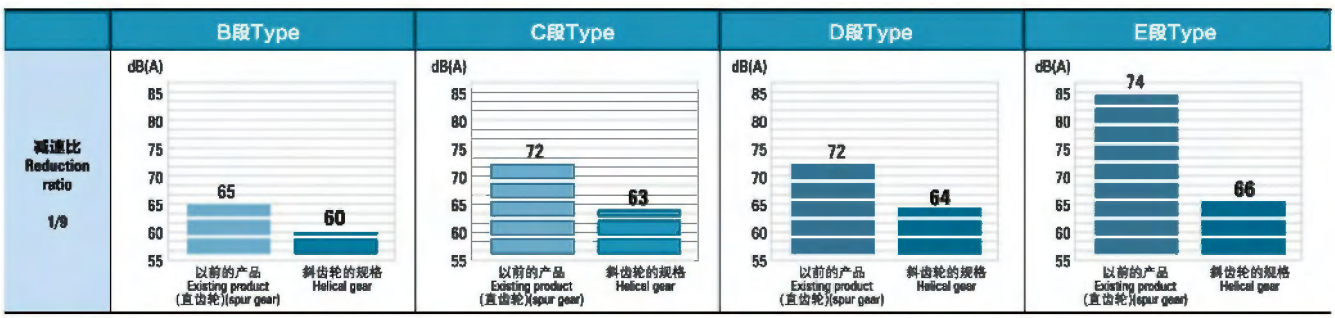


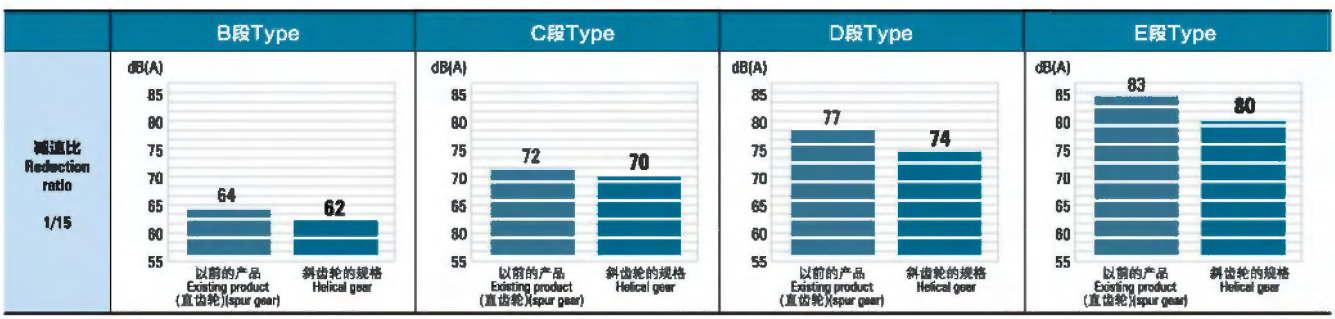


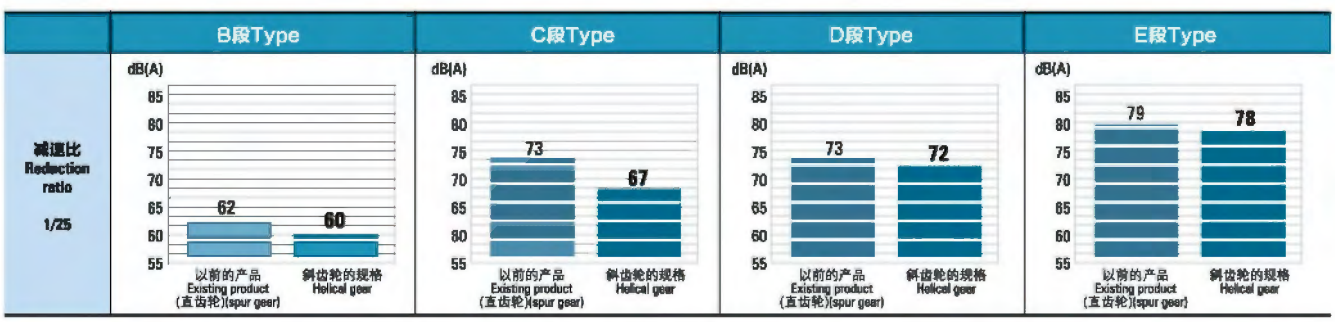


公司内部调查中的测定条件如下：
※减速机输入转速：3000rpm
※测定位置：距离产品50cm的位置
※噪音值：噪音值是代表值
※负荷：减速机额定负荷
※减速机固定方法：减速机固定于L型安装板上后，再固定于平台上。

The measuring conditions in an internal survey are as mentioned below:
※Reducer input speed : 3000rpm
※Measurement spot : 50cm distant from the product
※Noise value : Typical values chosen for noise values
※Load : Reducer load rating
※Reducer fixation : The reducer is fixed onto the L-type attachment plate so thet it cannot move.

# 轴向、容许径向负荷
# TECHNICAL DATA THRUST LOAD

YKA TRANSMISSION MACHINE 宜昌·全球动力专家

## ■轴向负荷(对马达的轴向负荷) Thrust load (to motor)

因采用的是斜齿轮，故在轴的方向上会产生轴向的力。但本公司的ABLE减速机采用可以缓和轴向力的结构，因此，不管是背隙标准型，还是LB型、PB型，不会对伺服马达造成影响。至于其他的马达系列，请对各马达生产厂家的容许轴向负荷进行确认。

Thrust force acts in a shaft direction for units equipped with a helical gear. However, our ABLE REDUCER is designed to mitigate thrust force and thus does not influence a servo motor irrespective of backlash standard type, LB type, and PB type. For other motor series, see permissible thrust of each motor manufacturer.

| 额定输入马达功率 Rated input motor | 型号 Type | | | | VR减速机产生的径向力 VR Reducer Thrust Force (N) | 伺服马达瞬间容许径向负荷(N) Instantaneous Time Permissible Thrust Load Of Servo Motor (N) | | |
|---|---|---|---|---|---|---|---|---|
| | 机种 Model | | 段位号 Type no. | 马达功率 Motor | | 松下电器产业(株) MSMA系列 Panasonic MSMA Series | (株)安川电机SGMAH系列 Yaskawa Electric SGMAH Series | 三菱电机(株)HC-MF系列 Mitsubishi Wlectric HC-MF Series |
| 50W | VRSF | 3 | B | 50 | 7 | 58 | 54 | 59 |
| | VRSF | 5 | B | 50 | 15 | | | |
| | VRSF | 9 | B | 50 | 29 | | | |
| | VRSF | 15 | B | 50 | 15 | | | |
| | VRSF | 20 | B | 50 | 15 | | | |
| | VRSF | 25 | B | 50 | 15 | | | |
| | VRSF | 35 | B | 50 | 22 | | | |
| | VRSF | 45 | C | 50 | 29 | | | |
| | VRSF | 81 | C | 50 | 29 | | | |
| 100W | VRSF | 3 | B | 100 | 15 | 58 | 54 | 59 |
| | VRSF | 5 | B | 100 | 29 | | | |
| | VRSF | 9 | B | 100 | 46 | | | |
| | VRSF | 15 | B | 100 | 29 | | | |
| | VRSF | 20 | B | 100 | 29 | | | |
| | VRSF | 25 | B | 100 | 29 | | | |
| | VRSF | 35 | C | 100 | 16 | | | |
| | VRSF | 45 | C | 100 | 46 | | | |
| | VRSF | 81 | D | 100 | 46 | | | |
| 200W | VRSF | 3 | B | 200 | 22 | 98 | 74 | 98 |
| | VRSF | 5 | B | 200 | 44 | | | |
| | VRSF | 9 | C | 200 | 43 | | | |
| | VRSF | 15 | C | 200 | 21 | | | |
| | VRSF | 20 | C | 200 | 21 | | | |
| | VRSF | 25 | C | 200 | 21 | | | |
| | VRSF | 35 | C | 200 | 32 | | | |
| | VRSF | 45 | D | 200 | 43 | | | |
| | VRSF | 81 | E | 200 | 17 | | | |
| 400W | VRSF | 3 | B | 400 | 44 | 98 | 74 | 98 |
| | VRSF | 5 | C | 400 | 43 | | | |
| | VRSF | 9 | C | 400 | 64 | | | |
| | VRSF | 15 | C | 400 | 43 | | | |
| | VRSF | 20 | C | 400 | 43 | | | |
| | VRSF | 25 | C | 400 | 43 | | | |
| | VRSF | 35 | D | 400 | 26 | | | |
| | VRSF | 45 | E | 400 | 34 | | | |
| 750W | VRSF | 3 | C | 750 | 20 | 147 | 147 | 147 |
| | VRSF | 5 | C | 750 | 40 | | | |
| | VRSF | 9 | D | 750 | 64 | | | |
| | VRSF | 15 | D | 750 | 32 | | | |
| | VRSF | 20 | D | 750 | 32 | | | |
| | VRSF | 25 | D | 750 | 32 | | | |
| | VRSF | 35 | E | 750 | 48 | | | |

注 1)产生的径向力：产生瞬间最大输出扭矩时的数值。 Note 1) Thrust force : Numerical value upon max. instantaneous output torque

## ■容许径向负荷(对减速机的径向负荷) Permissible radial load (to reducer)

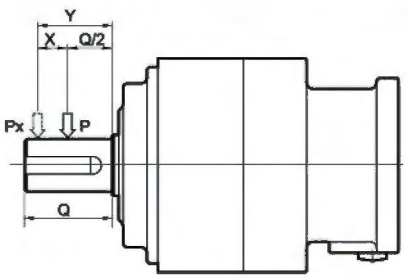


径向负荷处于输出轴中央部位以外的位置时，请用下列公式和常数计算。

If radial load is out of the center of the output shaft,calculate using the following equations and positive numbers:

Px={K/(K+X)}×P

X=Y-Q/2

P: 容许径向负荷(N) Permissible radial load (N)

Q: 常数Positive number

K: 常数Positive number

X: 负荷点位移距离(mm) Load point displacement distance (mm)

Y: 负荷点(mm) Load point (mm)

Px: 容许轴负荷(N) Permissible shaft load (N)

| 段位号 Type no. | 常数: Q Positive number: Q | 常数: K Positive number: K |
|---|---|---|
| B | 20 | 46 |
| C | 30 | 70 |
| D | 40 | 79.5 |
| E | 55 | 104 |

# 上海宜嘉传动机械有限公司

SHANHAI IKA TRANSMISSION MACHINE CO.,LTD.

厂址：中国·上海市·嘉定区经济开发区

24h咨询热线：13817759537

总机：021-56389463　56389436　56388489　　传真：021-56388146

网址：www.cnyika.com　　邮箱：cnyika@163.com

·版权所有，未经本公司书面授权许可，本手册之任何部分不得转载、翻印，违者必究。